12. Front Wheel/Suspension/Steering

Service Information	12-1	Fork Removal/Installation	12-10
Troubleshooting	12-1	Fork Disassembly	12-12
Left Handlebar Disassembly/Assembly	12-2	Fork Assembly	12-13
Right Handlebar Disassembly/Assembly	12-4	Steering Stem Removal	12-14
Front Wheel Removal/Installation	12-6	Steering Stem Installation	12-16
Front Wheel Disassembly/Assembly	12-8		

Service Information

⚠ WARNING

- **Riding on damaged rims impairs safe operation of the vehicle.**

- When servicing the front wheel, support the motorcycle securely with a jack or other support under the engine.
- When installing the front wheel, note the normal rotating direction.
- Tubeless tire removal, repair, and remounting procedures are covered in the section 16 of the Common Service Manual. When remounting the tire, note the normal rotating direction.
- Refer to the section 14 for brake system information.
- Refer to the section 18 for light, meter and switch information.

Troubleshooting

Hard Steering
- Steering head bearing adjustment nut too tight
- Faulty steering head bearings
- Damaged steering stem races
- Insufficient tire pressure
- Faulty tire

Steers to One Side or Does Not Track Straight
- Bent fork
- Bent front axle: wheel installed incorrectly
- Faulty steering head bearings
- Bent frame
- Worn wheel bearing
- Worn swingarm pivot

Front Wheel Wobbling
- Bent rim
- Worn front wheel bearings
- Faulty tire
- Unbalanced tire and wheel

Wheel Turns Hard
- Faulty wheel bearing
- Brake drag (page 14-1)
- Bent fron axle

Soft Suspension
- Weak fork spring
- Insufficient fluid in fork
- Low fluid level in fork
- Low tire pressure

Hard Suspension
- Incorrect fluid weight
- Bent fork tubes
- Clogged fork fluid passage
- High tire pressure

Front Suspension Noisy
- Insufficient fluid in fork
- Loose fork fasteners

Left Handlebar Disassembly/Assembly

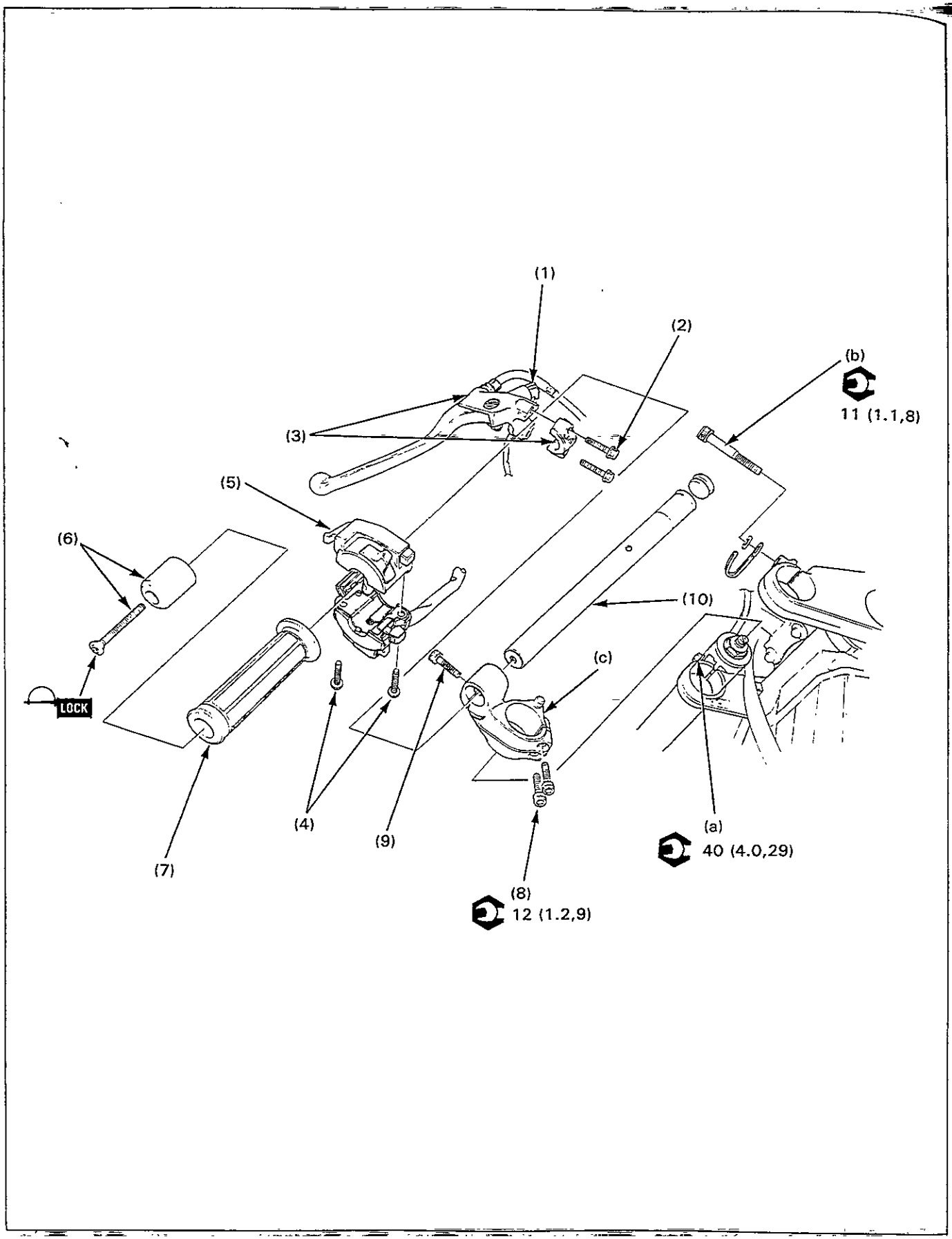

	Procedure	Q'ty	Remarks
	Disassembly Order		
(1)	Clutch switch wire	2	Disconnect from the switch terminals.
(2)	Clutch lever holder bolt	2	
(3)	Clutch lever holder/bracket	1/1	
(4)	Attaching screw	2	
(5)	Left handlebar switch	1	
(6)	Left handlebar weight/attaching screw	1/1	
(7)	Left hadlebar grip	1	
(8)	Handlebar holder pinch bolt	2	Loosen the bolts.
(9)	Left handlebar pinch bolt	1	
(10)	Left handlebar	1	NOTE • Spread the slit slightly and push the handlebar out.
	Handlebar holder removal order		Installation is in the reverse order of removal.
(a)	Lower fork pinch bolt	1	Loosen the bolt.
(b)	Upper fork pinch bolt	1	Loosen the bolt. Remove the wire bands.
(c)	Left handlebar holder	1	NOTE • Remove the front wheel (page 12-6) and lower the fork.
	Assembly Order		
(10)	Left handlebar	1	
(9)	Left handlebar pinch bolt	1	
(8)	Handlebar holder pinch bolt	2	NOTE • Align the locating pin on the holder with the groove in the fork top bridge, and tighten the upper bolt first.
(7)	Left handlebar grip	1	
(6)	Left hadlebar weight/attaching screw	1/1	NOTE • Apply locking agent to the screw thread.
(5)	Left handlebar switch	1	NOTE • Align the locating pin with the hole in the handlebar.
(4)	Attaching screw	2	NOTE • Tighten the front screw first.
(3)	Clutch lever holder/bracket	1/1	NOTE • Install the holder with the "UP" mark facing up.
(2)	Clutch lever holder bolt	2	NOTE • Tighten the upper bolt first.
(1)	Clutch switch wire	2	Connect to the switch terminals.

Right Handlebar Disassembly/Assembly

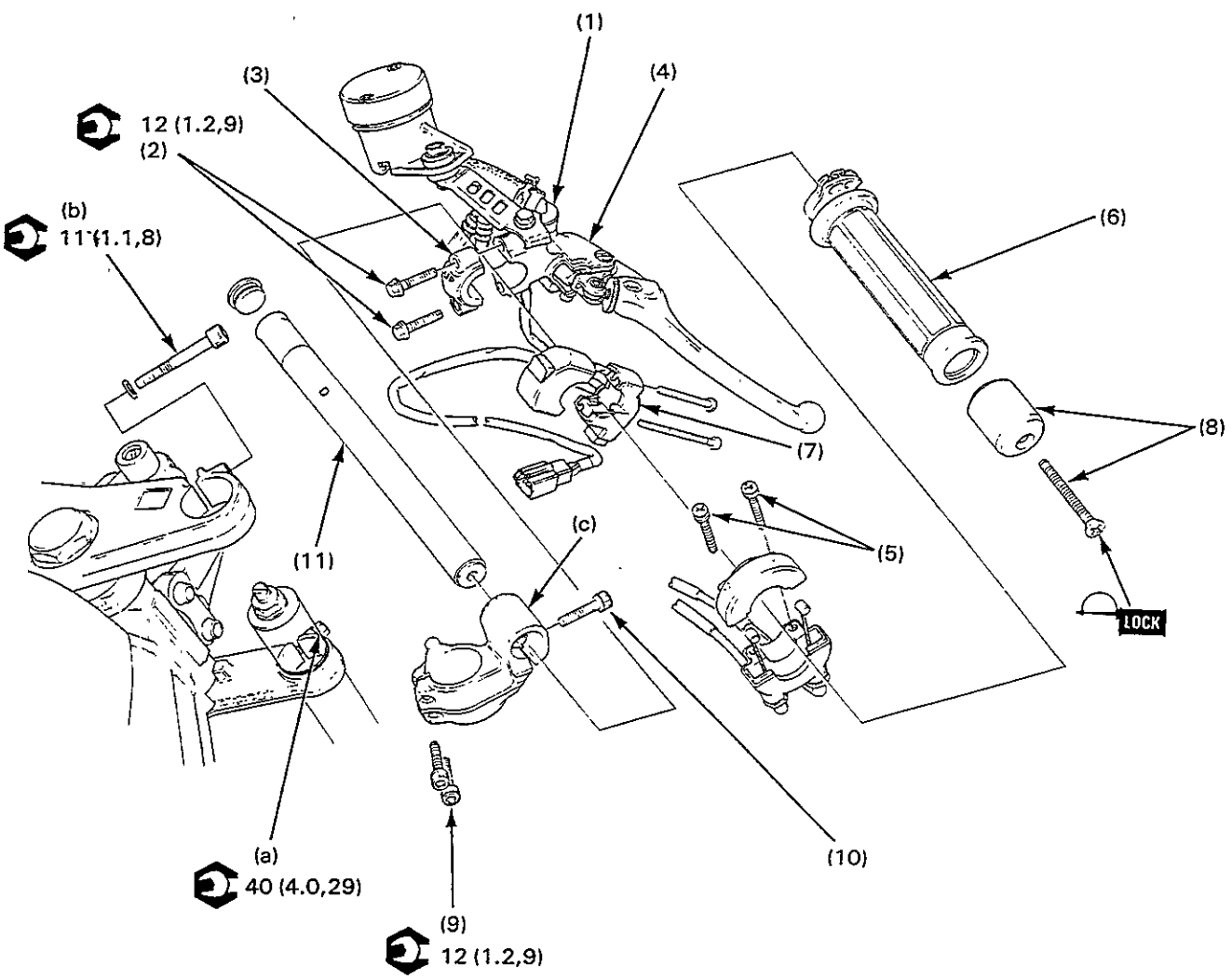

	Procedure	Q'ty	Remarks
	Disassembly Order		
(1)	Front brake switch wire	2	Disconnect from the switch terminals
(2)	Master cylinder holder bolt	2	
(3)	Master cylinder holder	1	
(4)	Brake master cylinder assembly	1	**CAUTION** • **Keep the master cylinder upright.**
(5)	Throttle housing screw	2	
(6)	Throttle grip	1	Disconnect the throttle cable.
(7)	Engine stop switch	1	Remove the screws.
(8)	Right handlebar weight/attaching screw	1/1	
(9)	Handlebar holder pinch bolt	2	Loosen the bolts.
(10)	Right handlebar pinch bolt	1	
(11)	Right handlebar	1	NOTE • Spread the slit slightly and puch the handlebar out.
	Handlebar holder removal order		Installation is in the reverse order of removal.
(a)	Lower fork pinch bolt	1	Loosen the bolt.
(b)	Upper fork pinch bolt	1	Loosen the bolt. Remove the brake hose band.
(c)	Left handlebar holder	1	NOTE • Remove the front wheel (page 12-6) and lower the fork.
	Assembly Order		
(11)	Right handlebar	1	
(10)	Right handlebar pinch bolt	1	
(9)	Handlebar holder pinch bolt	2	NOTE • Alighn the locating pin on the holder with the groove in the fork top bridge, and tighten the upper bolt first.
(6)	Throttle grip	1	Connect the throttle cables.
(5)	Throttle housing screw	2	NOTE • Align the mating surface with the punch mark on the handlebar and tighten the front screw first.
(7)	Engine stop switch	1	NOTE • Tighten the front attaching screw first.
(4)	Brake master cylinder assembly	1	
(3)	Master cylinder holder	1	NOTE • Install with the "UP" mark facing up.
(2)	Master cylinder bolt	2	NOTE • Align the end of the holder with the punch mark on the handlebar and tighten the upper bolt first.
(1)	Front brake switch wire	2	Connect to the switch terminals.

Front Wheel Removal/Installation

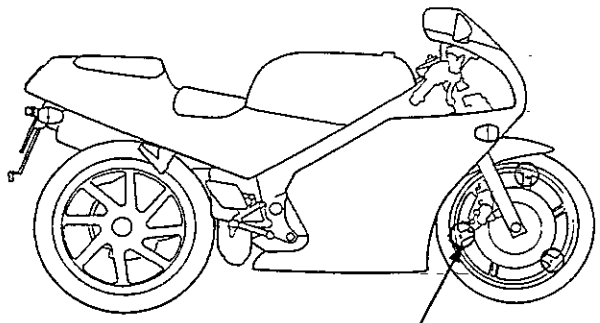

The arrow marks are stamped on the right side only.

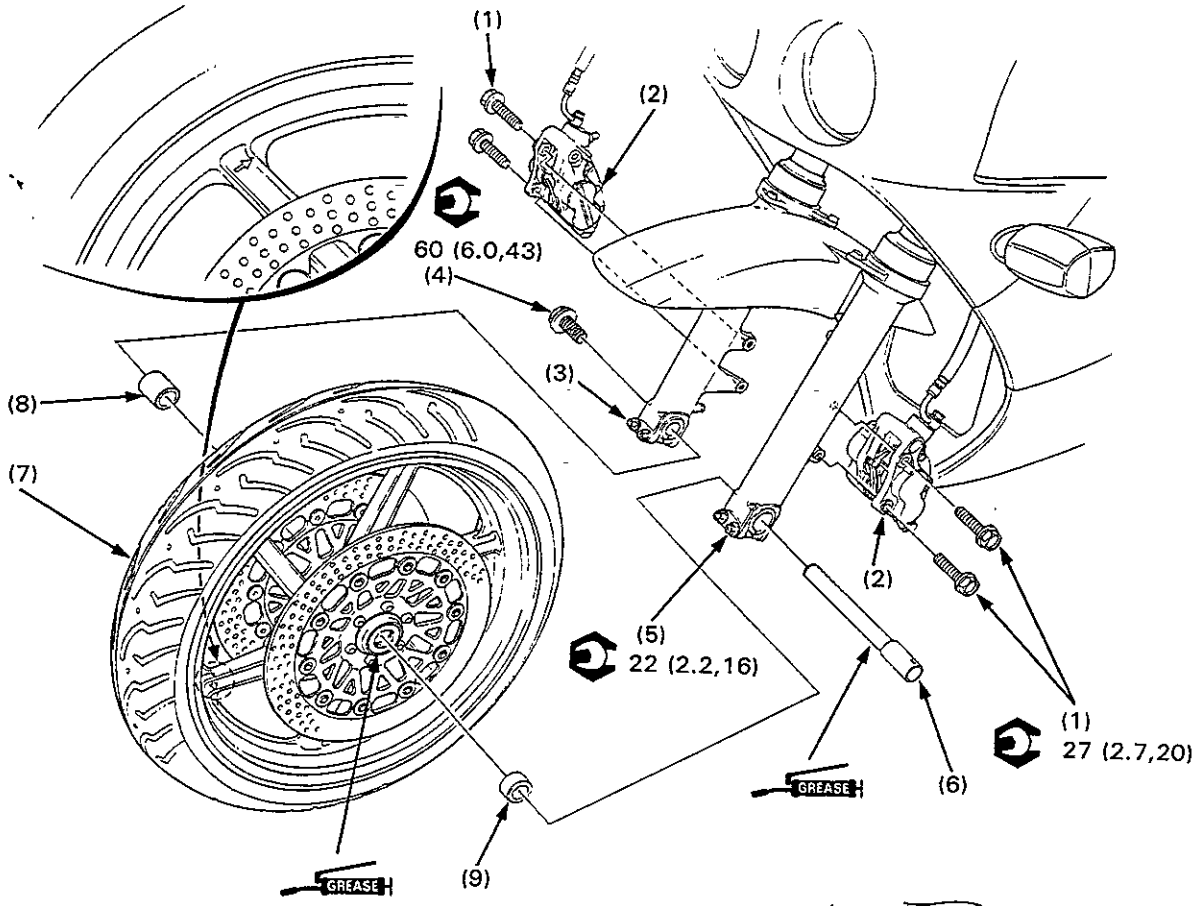

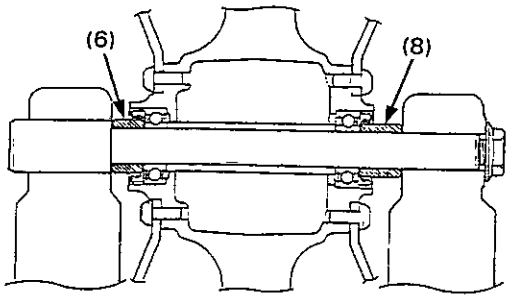

⚠ WARNING

- **A contaminated brake disc or pad reduces stopping power. Discard contaminated pads and clean a contaminated disc with a high quality brake degreasing agent.**
- **Inhaled asbestos fibers have been found to cause respiratory disease and cancer. Never use an air hose or dry brush to clean brake assemblies.**

NOTE

- Install the front wheel with the arrow mark (stamped on the right side) facing to the normal rotating direction.
- Do not depress the brake lever when the caliper is removed, or it will be difficult to refit the disc between the brake pads.

Requisite Service

- Raise the wheel off the ground by placing a jack or other support under the engine.

	Procedure	Q'ty	Remarks
	Removal Order		
(1)	Caliper mounting bolt	4	
(2)	Front caliper assembly	2	**CAUTION** • **Do not hang the caliper by the brake hose.**
(3)	Right axle pinch bolt	2	Loosen the bolts.
(4)	Axle bolt	1	
(5)	Left axle pinch bolt	2	Loosen the bolts.
(6)	Axle shaft	1	
(7)	Front wheel assembly	1	Disassembly/assembly (page 12-8)
(8)	Side collar	2	
	Installation Order		
(8)	Side collar	2	NOTE • Right side collar is longer than the left side collar. • Apply grease to the dust seal lips before installing.
(7)	Front wheel assembly	1	
(6)	Axle shaft	1	NOTE • Apply thin coat of grease.
(4)	Axle bolt	1	
(5)	Left axle pinch bolt	2	
(3)	Right axle pinch bolt	2	NOTE • Tighten after tightening the axle bolt.
(2)	Front caliper assembly	2	**CAUTION** • **Be careful not to damage the pads.**
(1)	Caliper mounting bolt	4	

Front Wheel Disassembly/Assembly

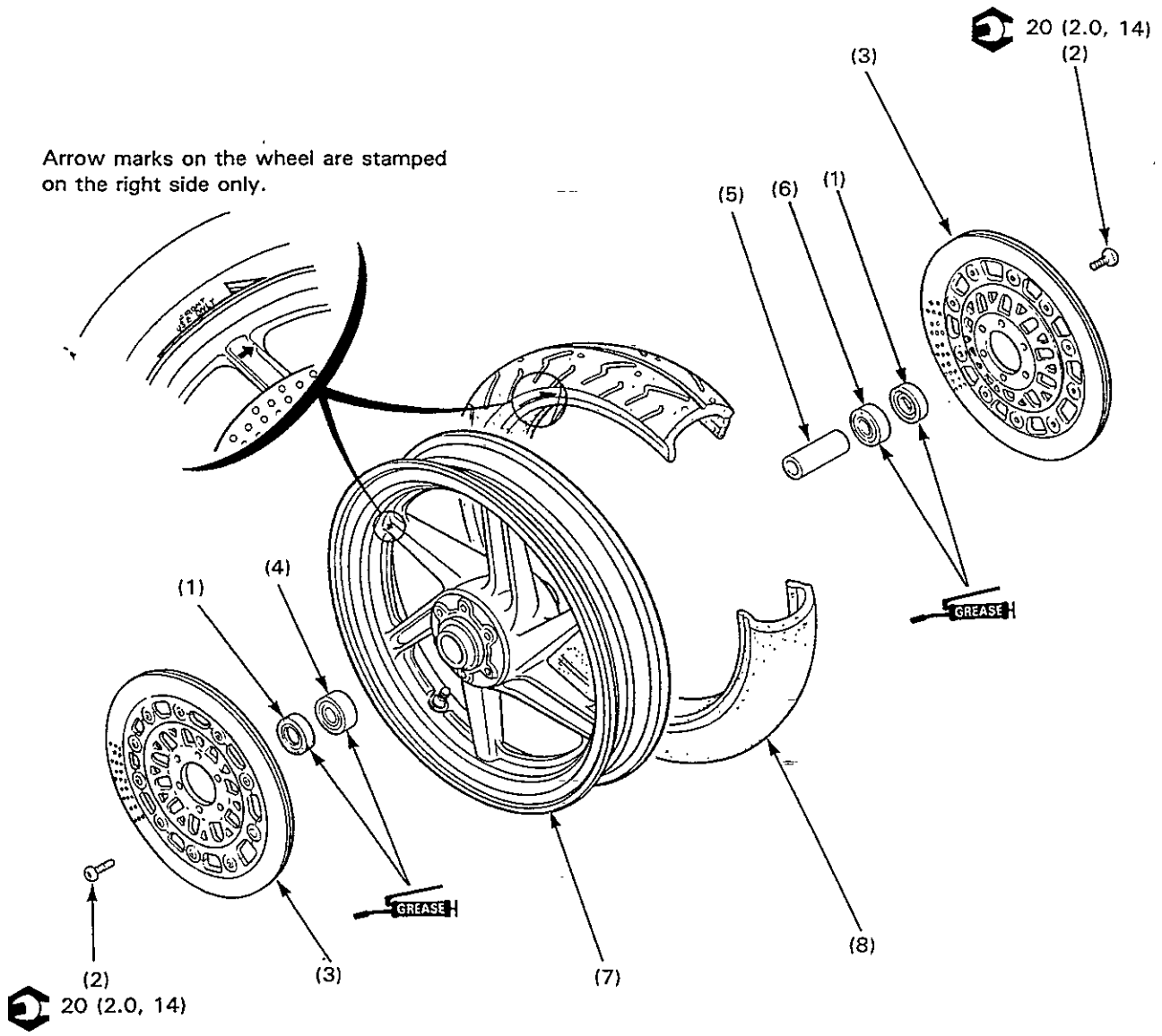

⚠ WARNING

- **A contaminated brake disc or pad reduces stopping power. Discard contaminated pads and clean a contminated disc with a high quality brake degreasing agent.**

NOTE

- The left and right brake discs should be installed on the original side unless they are replaced.
- When remounting the tire onto the wheel, face the arrow marks on the wheel and tire to the same direction.
- Do not add more than 60 g (2.1 oz) of the wheel balance weight.
- Always replace wheel bearings as a set.

Requisite Service

- Front wheel removal/installation

	Procedure	Q'ty	Remarks
	Disassembly Order		Assembly is in the reverse order of disassembly.
(1)	Dust seal	2	
(2)	Brake disc bolt	12	
(3)	Brake disc	2	
(4)	Right wheel bearing (6004UU)	1	
(5)	Distance collar	1	
(6)	Left wheel bearing (6004UU)	1	At installation, drive a new left bearing into the hub first, then drive a new right bearing.
(7)	Front tire	1	NOTE • At installation, face the arrow mark to the same direction as the arrow mark on the wheel.

Fork Removal/Installation

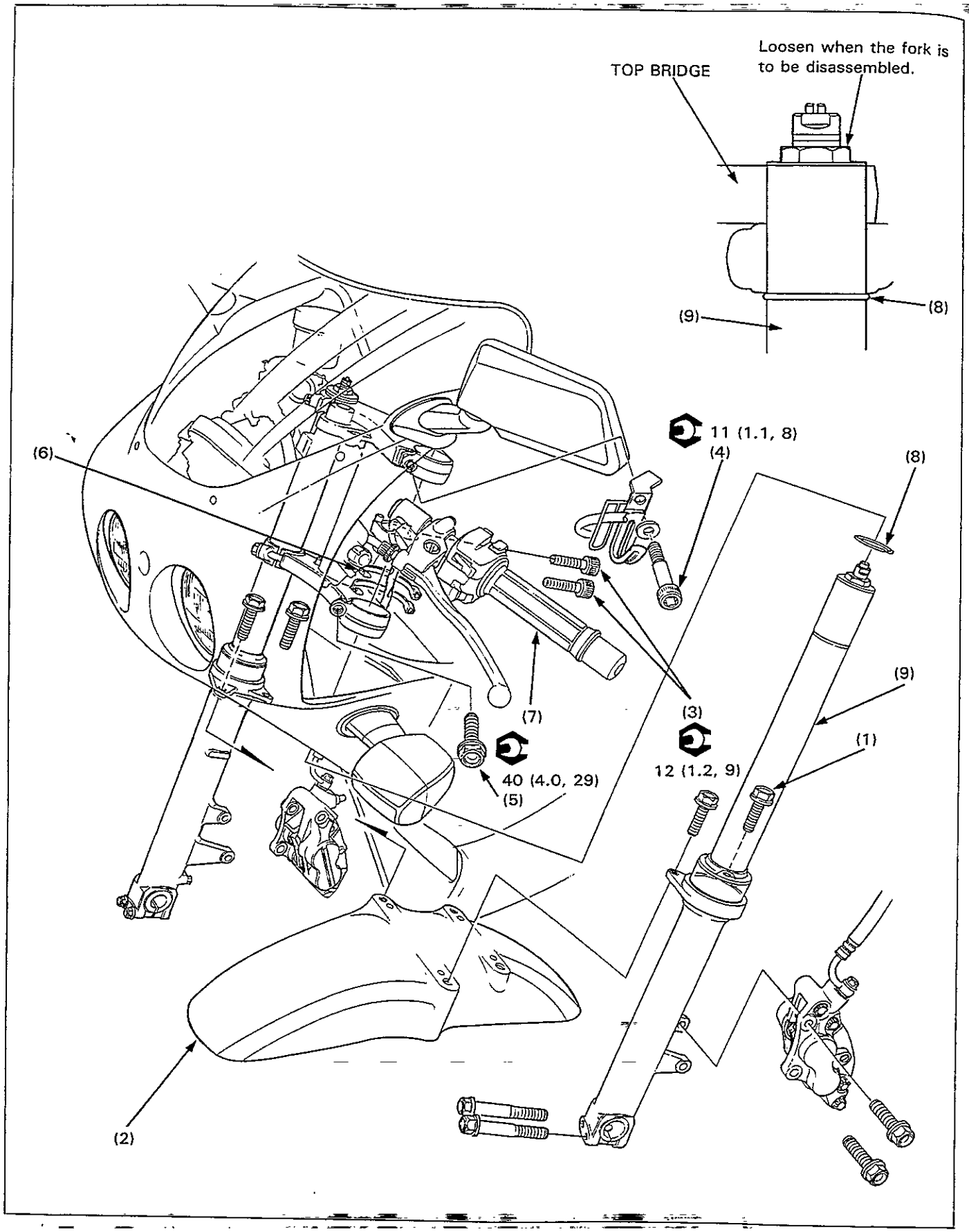

NOTE

- When the fork is to be disassembled, set the pre-load adjuster to the "softest" position, loosen the upper fork pinch bolt and loosen the fork bolt but do not remove it yet.
- After assembling the fork, tighten the fork bolt which is temporarily tightened before tightening the upper fork pinch bolt.

Requisite Service

- Front wheel removal/installation (page 12-6)

	Procedure	Q'ty	Remarks
	Removal Order		
(1)	Front fender mounting bolt	4	
(2)	Front fender	1	
(3)	Handlebar holder pinch bolt	2	Loosen the bolts.
(4)	Upper fork pinch bolt	1	Loosen the bolt.
(5)	Lower fork pinch bolt	1	Loosen the bolt.
(6)	Wire band	2	NOTE • On the right fork, remove the brake hose band.
(7)	Handlebar assembly	1	Lower the fork part way and remove from the fork. **CAUTION** • **On the right side, keep the master cylinder upright.**
(8)	Stopper ring	1	
(9)	Fork assembly	1	Disassembly (page 12-12)
	Installation Order		
(9)	Fork assembly	1	
(8)	Stopper ring	1	Support the fork and install into the groove securely.
(7)	Handlebar assembly	1	NOTE • Install onto the fork and raise the fork through the top bridge, aligning the locating pin of the handlebar holder with the top bridge groove.
(5)	Lower fork pinch bolt	1	
(4)	Upper fork pinch bolt	1	
(3)	Handlebar holder pinch bolt	2	
(6)	Wire band	2	
(2)	Front fender	1	
(1)	Front fender mounting bolt	4	

Fork Disassembly

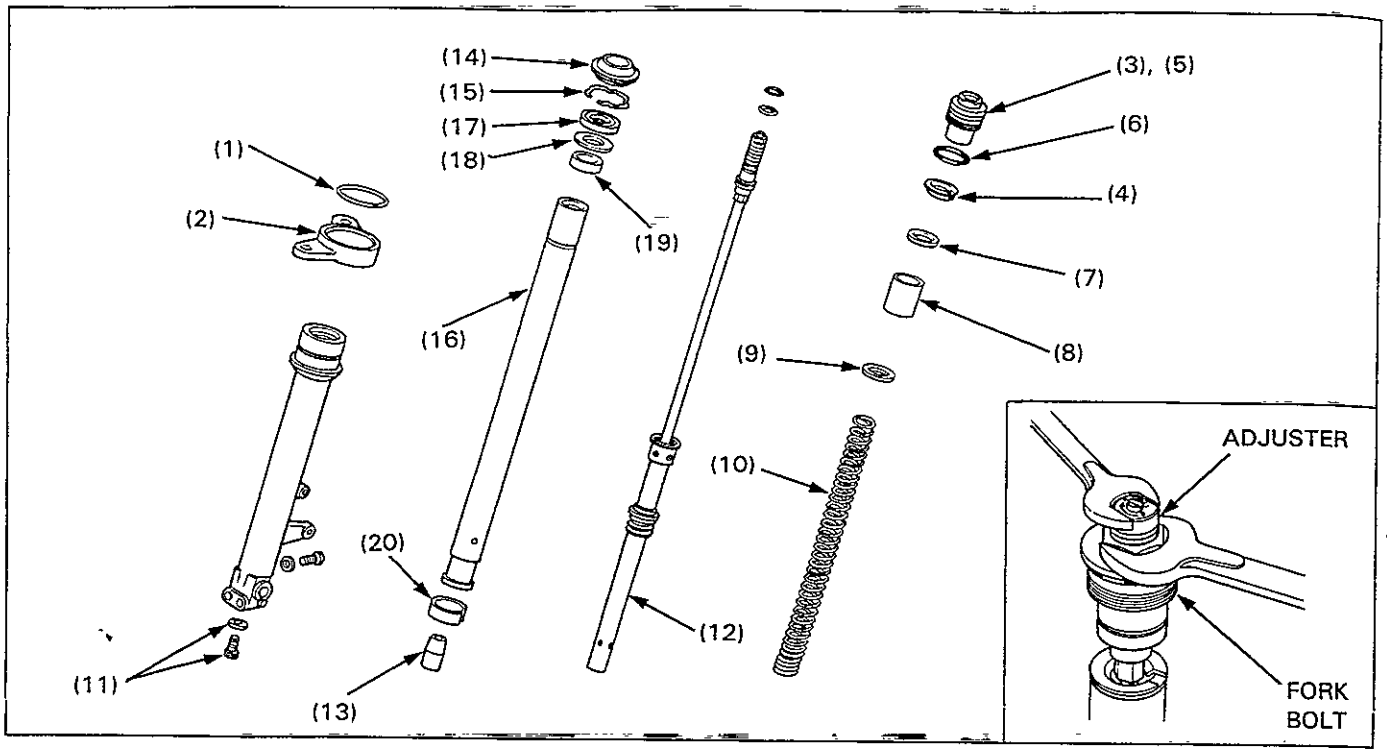

NOTE

- Set the pre-load adjuster to the "softest" position before loosening the fork bolt.

Requisite Service

- Fork removal/Installation (page 12-10).

	Procedure	Q'ty	Remarks
	Disassembly Order		
(1)	Stopper ring	1	
(2)	Fender bracket	1	
(3)	Fork bolt	1	Remove from the fork tube.
(4)	Stopper seat	1	NOTE • Drain the fork oil from the fork tube and piston rod after removing.
(5)	Fork bolt	1	Hold the pre-load adjuster and remove the fork bolt as shown.
(6)	O-ring	1	
(7)	Spring seat	1	
(8)	Spacer	1	
(9)	Spring seat	1	
(10)	Fork spring	1	
(11)	Socket bolt/washer	1/1	
(12)	Fork piston assembly	1	**CAUTION** • **Do not remove the adjuster from the fork piston.**
(13)	Oil lock piece	1	
(14)	Dust seal	1	
(15)	Stopper ring	1	
(16)	Fork tube	1	
(17)	Oil seal	1	
(18)	Back-up ring	1	
(19)	Slider bushing	1	
(20)	Fork tube bushing	1	**CAUTION** • **Do not remove the bushing unless it is replaced.**

Fork Assembly

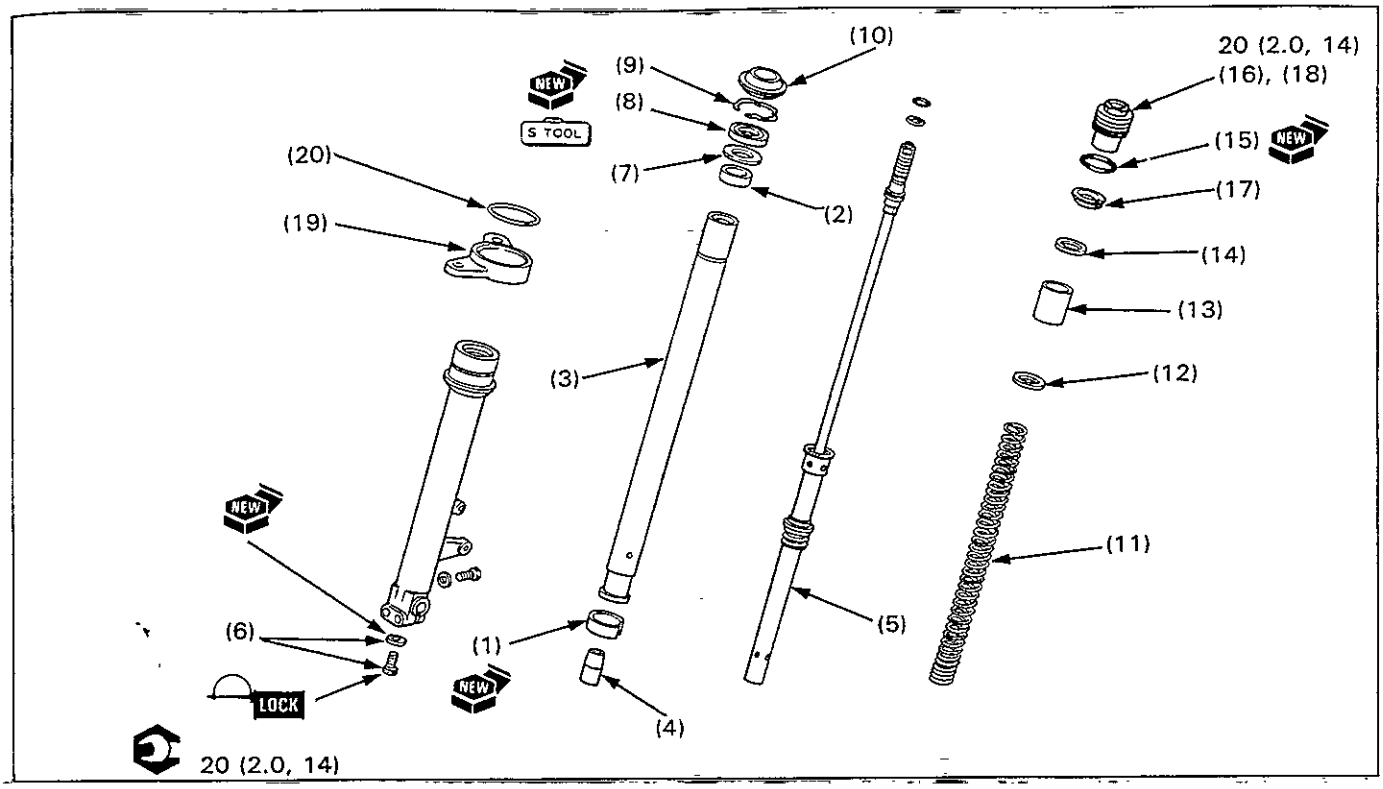

NOTE

- Set the pre-load adjuster to the "softest" position before tightening the fork bolt.

	Procedure	Q'ty	Remarks
	Assembly Order		
(1)	Fork tube bushing	1	
(2)	Slider bushing	1	Install onto the fork tube.
(3)	Fork tube	1	
(4)	Oil lock piece	1	Install onto the end of the fork piston.
(5)	Fork piston	1	
(6)	Sealing washer/socket bolt	1/1	NOTE • Apply locking agent to the bolt threads.
(7)	Back-up ring	1	
(8)	Oil seal	1	Use the fork seal driver (07947—KA50100) and attachment (0797—KF00100).
(9)	Stopper ring	1	
(10)	Dust seal	1	NOTE • Pour fork oil to the specified level before installing the spring (page 1-11).
(11)	Fork spring	1	NOTE • Install with the tapered end facing down.
(12)	Spring seat	1	
(13)	Spacer	1	
(14)	Spring seat	1	
(15)	O-ring	1	
(16)	Fork bolt	1	Install onto the adjuster.
(17)	Stopper seat	1	
(18)	Fork bolt	1	Screw into the fork tube, but do not tighten yet. **CAUTION** • **Be careful not to cross-thread.**
(19)	Fender bracket	1	
(20)	Stopper ring	1	

Steering Stem Removal

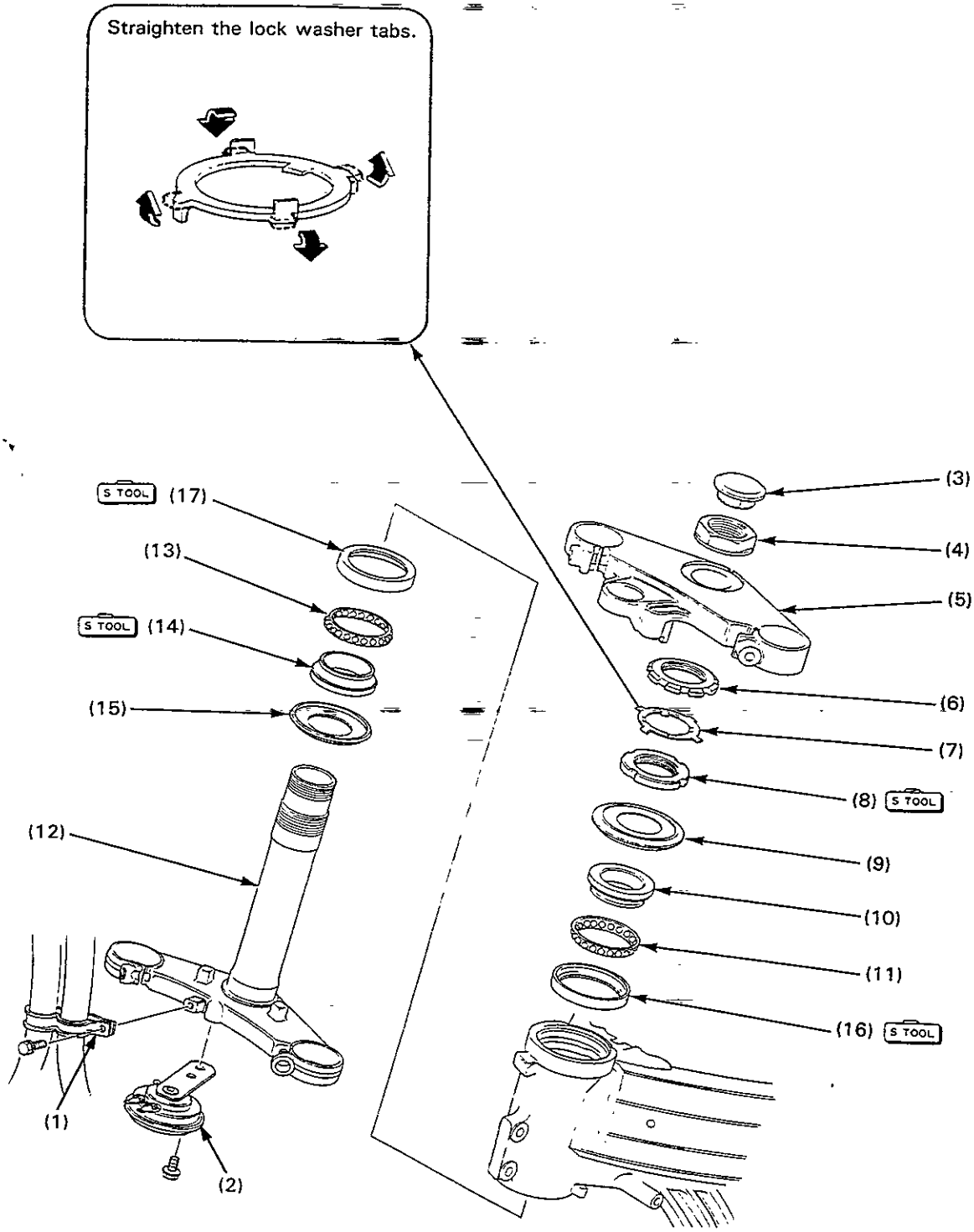

NOTE

- Replace the steering bearing and races as a set.
- Do not reuse the lock washer.

Requisite Service

- Front wheel removal (page 12-6)
- Fork removal (page 12-10)

	Procedure	Q'ty	Remarks
	Removal Order		
(1)	Brake hose clamp	1	
(2)	Horn	1	Disconnect the horn wires.
(3)	Steering stem nut cap	1	
(4)	Steering stem nut	1	
(5)	Top bridge	1	
(6)	Lock nut	1	Straighten the lock washer tabs.
(7)	Lock washer	1	
(8)	Steering bearing adjustment nut	1	Use the steering stem socket (07HMA—MR70100).
(9)	Upper dust seal	1	
(10)	Upper bearing inner race	1	
(11)	Upper bearing	1	
(12)	Steering stem	1	
(13)	Lower bearing	1	
(14)	Lower bearing inner race	1	Remove from the steering stem.
(15)	Lower dust seal	1	
(16)	Upper bearing outer race	1	Use the driver attachment B (07946—KM90200), driver assembly shaft (07946—KM90300), bearing remover B (07946—KM90500) and base (07946—KM90600).
(17)	Lower bearing outer race	1	

Steering Stem Installation

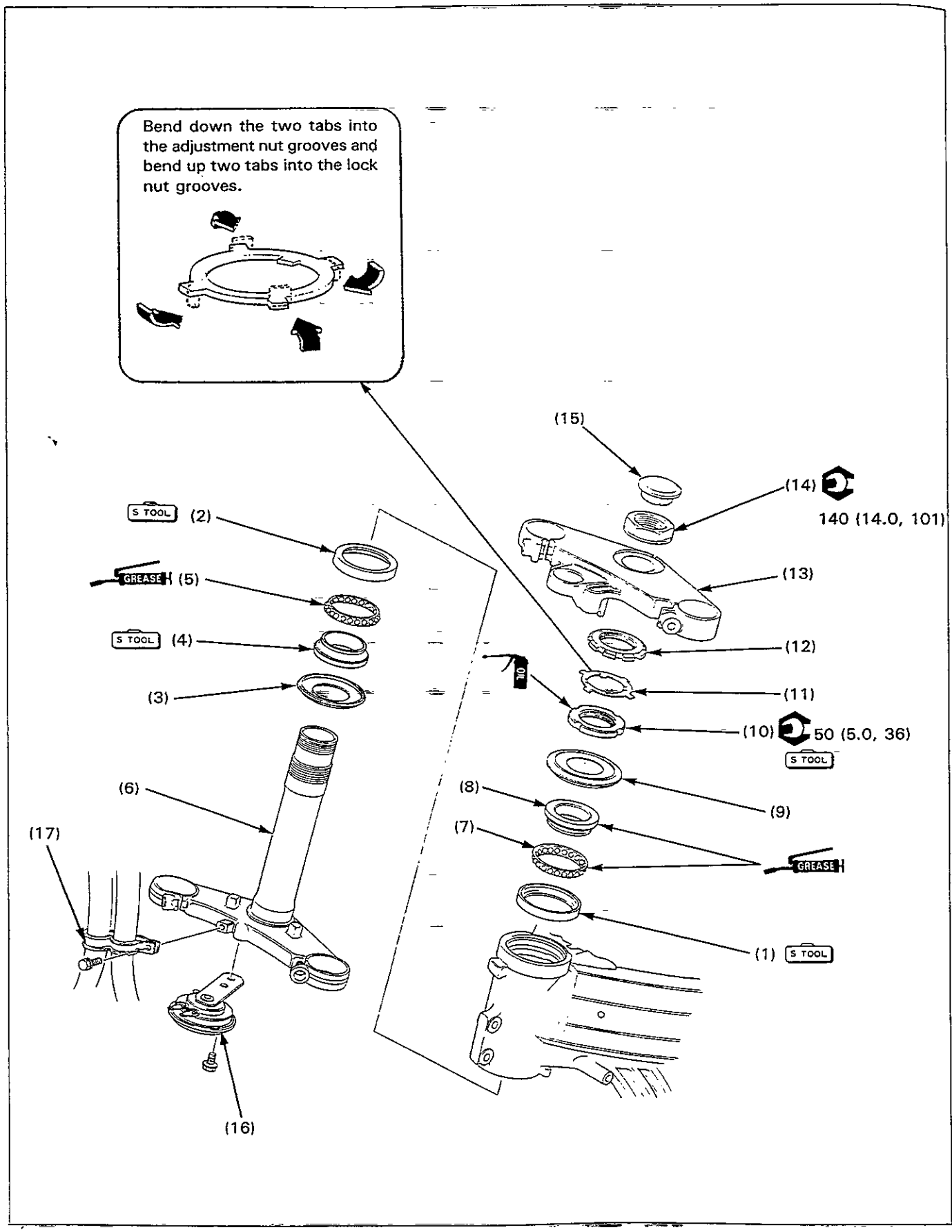

NOTE

- Check the steering bearing preload after installing.

Requisite Service

- Fork installation (page 12-10)
- Front wheel installation (page 12-6)

	Procedure	Q'ty	Remarks
	Installation Order		
(1)	Upper bearing outer race	1	Use the driver attachment B (07946—KM90200), driver assembly shaft (07946—KM90300), bearing remover B (07946—KM90500) and base (07946—KM90600).
(2)	Lower bearing outer race	1	
(3)	Lower dust seal	1	
(4)	Lower bearing inner race	1	Use the stem driver attachment (07HMD—MR70100) and inner driver C (07746—0030100).
(5)	Lower bearing	1	
(6)	Steering stem	1	
(7)	Upper bearing	1	
(8)	Upper bearing inner race	1	
(9)	Upper dust seal	1	
(10)	Steering bearing adjustment nut	1	Use the steering stem socket (07HMD—MR70100).
(11)	Lock washer	1	Bend down the two tabs into the adjustment nut grooves.
(12)	Lock nut	1	Hand tighten, align the grooves with the lock washer tabs and bend up the tabs into the grooves.
(13)	Top bridge	1	
(14)	Steering stem nut	1	NOTE Temporarily install the fron forks and tighten the nut.
(15)	Steering stem nut cap	1	
(16)	Horn	1	Connect the horn wires.
(17)	Brake hose clamp	1	

13. Rear Wheel/Suspension

Service Information	13-1	Shock Absorber, Linkage Removal/ Installation	13-8
Troubleshooting	13-1	Shock Absorber Disassembly/ Assembly	13-12
Rear Wheel, Driven Sprocket Removal/ Installation	13-2	Shock Linkage Disassembly/ Assembly	13-14
Bearing Holder Removal/Installation	13-4	Swingarm Removal/Installation	13-16
Bearing Holder, Axle Disassembly/ Assembly	13-6	Swingarm Disassembly/Assembly	13-18

Service Information

⚠ WARNING

- **The shock absorber contains nitrogen under high pressure. Do not allow fire or heat near the shock absorber.**
- **Before disposal of the shock absorber, release the nitrogen (Step: section 19 of the Common Service Manual; Drilling point: page 1-11).**
- **Riding on damaged rims impairs safe operation of the vehicle.**

- Tubeless tire removal, repair, and remounting procedures are covered in the section 16 of the Common Service Manual. When remounting the tire, note the normal rotating direction.
- Refer to the section 14 for brake system information.
- Use only genuine Honda replacement bolts and nuts for all suspension pivot and mounting points.

Troubleshooting

13

Rear Wheel Wobbling
- Loose wheel nut
- Bent rim
- Loose bearing holder
- Damaged axle bearing(s)
- Faulty swingarm pivot bearing(s)
- Loose shock linkage/swingarm fastener(s)
- Faulty tire
- Unbalanced tire and wheel

Soft Suspension
- Weak spring
- Incorrect suspension adjustment
- Faulty damper unit
- Oil leakage from damper unit

Hard Suspension
- Bent damper rod
- Damaged swingarm pivot bearings
- Damaged shock absorber bushing
- Incorrect suspension adjustment
- Faulty shock linkage bearings
- Insufficient lubrication of suspension pivots
- Damaged mount bushing

Rear Suspension Noise
- Loose fasteners

Rear Wheel, Driven Sprocket Removal/Installation

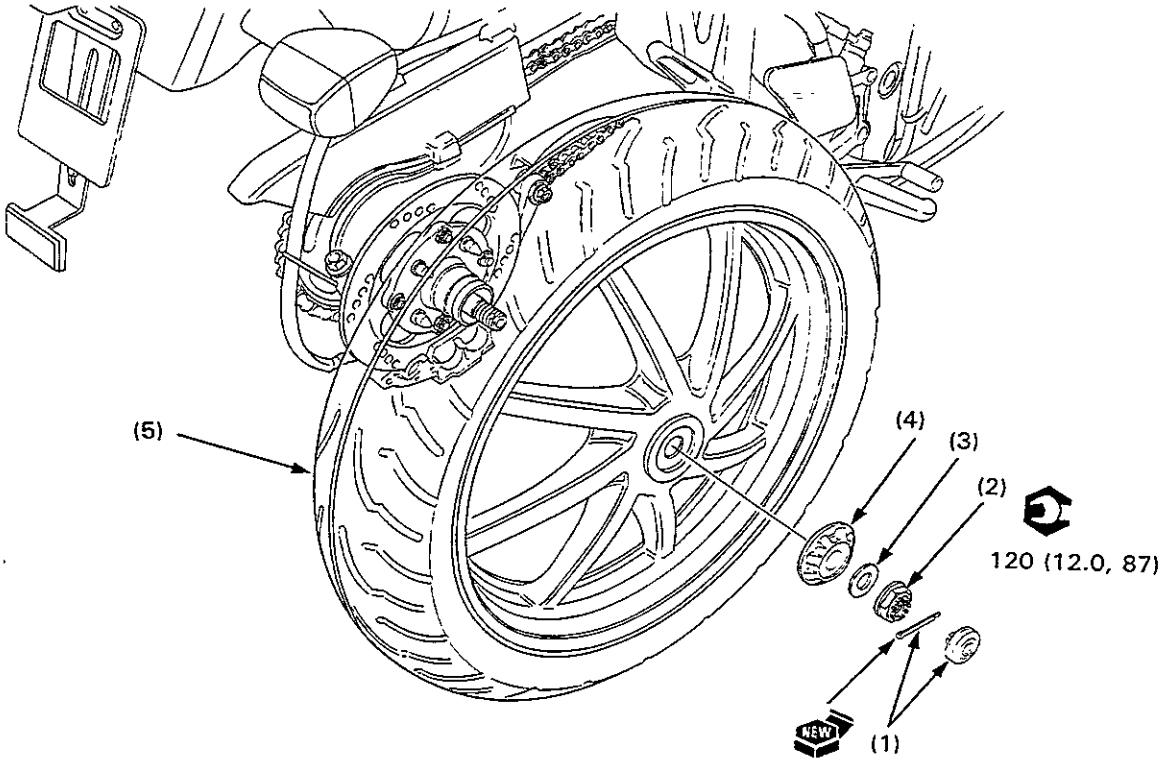

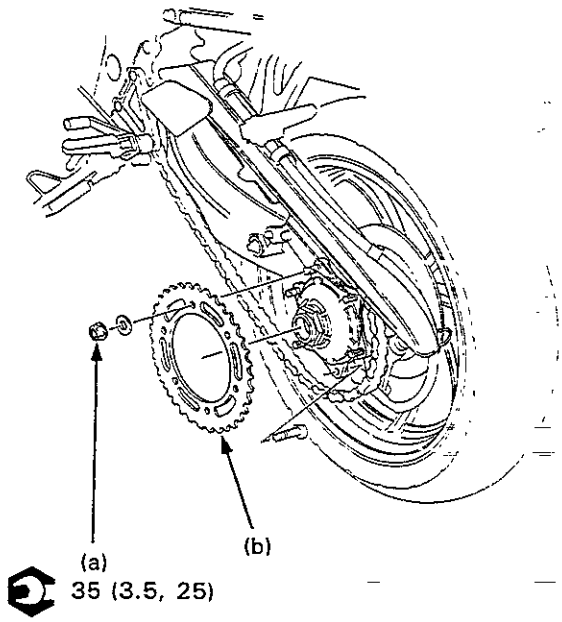

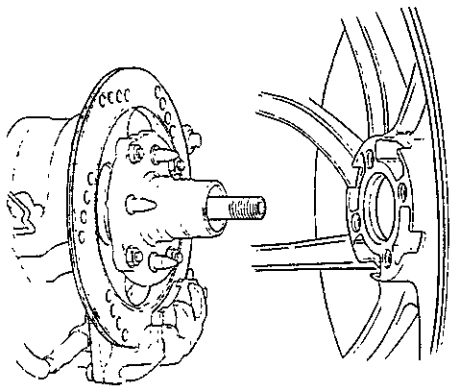

Align the pins with the holes.

Requisite Service

- Raise the rear wheel off the ground and support the motorcycle.

	Procedure	Q'ty	Remarks
	Removal Order		
(1)	Center cap/cotter pin	1/1	
(2)	Wheel nut	1	
(3)	Shim	1	
(4)	Center lock spacer	1	
(5)	Rear wheel	1	
	Driven Sprocket Removal Order		Installation is in the reverse order of removal.
(a)	Driven sprocket nut	6	
(b)	Driven sprocket	1	NOTE • Loosen the drive chain before removing (page 3-11).
	Installation Order		
(5)	Rear wheel	1	NOTE • Align the holes with the drive pins of the axle.
(4)	Center lock spacer	1	
(3)	Shim	1	
(2)	Wheel nut	1	
(1)	Cotter pin/center cap	1/1	

Bearing Holder Removal/Installation

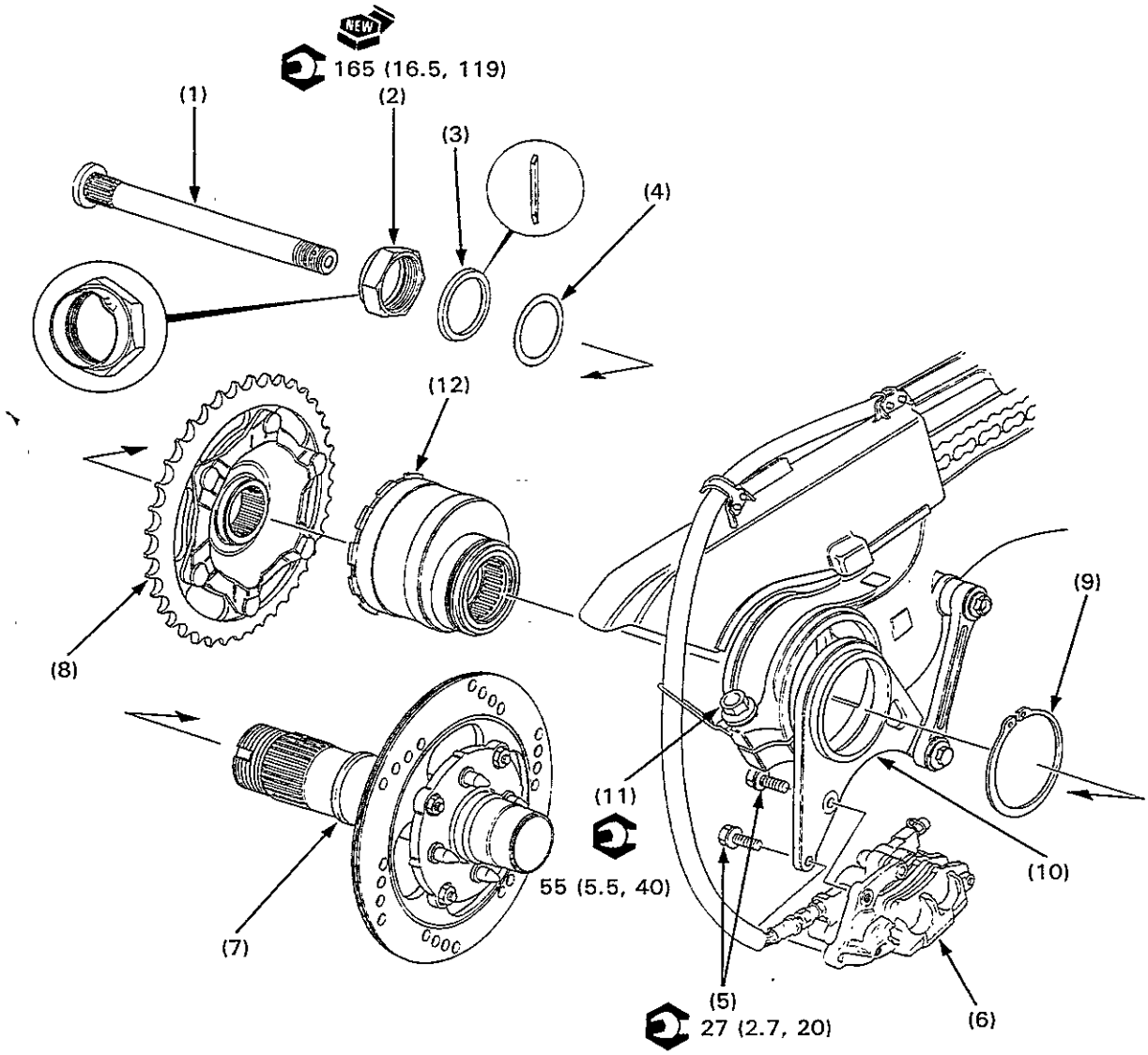

⚠ WARNING

- **A contaminated brake disc or pad reduces stopping power. Discard contaminated pads and clean a contaminated disc with a high quality brake degreasing agent.**
- **Inhaled asbestos fibers have been found to cause respiratory disease and cancer. Never use an air hose or dry brush to clean brake assemblies.**

NOTE

- Do not depress the brake pedal when the caliper is removed, or it will be difficult to refit the disc between the brake pads.
- Support the removed caliper with a piece of wire so that it does not hang by the brake hose. Do not twist the brake hose.

Requisite Service

- Rear wheel removal/installation (page 13-2)
- Loosen the drive chain (page 3-11).

	Procedure	Q'ty	Remarks
	Removal Order		
(1)	Axle bolt	1	NOTE • Tap out the bolt to the left side with a plastic hammer when it is to be replaced.
(2)	Lock nut	1	Loosen after unstaked.
(3)	Spring washer 1		
(4)	Thrust washer	1	
(5)	Brake caliper mounting bolt	2	
(6)	Brake caliper	1	**CAUTION** • **Do not hang by the brake hose.**
(7)	Axle/brake disc assembly	1	Pull out to the right side while holding the driven flange. Disassembly (page 13-6)
(8)	Driven flange	1	Remove from the drive chain.
(9)	Snap ring	1	
(10)	Caliper bracket	1	
(11)	Bearing holder pinch bolt	1	Fully loosen.
(12)	Bearing holder	1	Pull out of the swingarm. Disassembly (page 13-6)
	Installation Order		
(12)	Bearing holder	1	
(11)	Bearing holder pinch bolt	1	Loosely install.
(10)	Caliper bracket	1	
(9)	Snap ring	1	
(7)	Axle/brake disc assembly	1	Install from the right side while holding the driven flange.
(8)	Driven flange	1	Install the drive chain, then install aligning the splines.
(6)	Brake caliper	1	**CAUTION** • **Be careful not to damage the brake pads.**
(5)	Brake caliper mounting bolt	2	
(4)	Thrust washer	1	
(3)	Spring washer	1	NOTE • Install with the dished side facing in.
(2)	Lock nut	1	Use a new nut and stake it after tightening.
(1)	Axle bolt	1	Install a new bolt from the left side while aligning the splines when it is replaced. NOTE • Adjust the drive chain slack after installing the rear wheel (page 3-11).

Bearing Holder, Axle Disassembly/Assembly

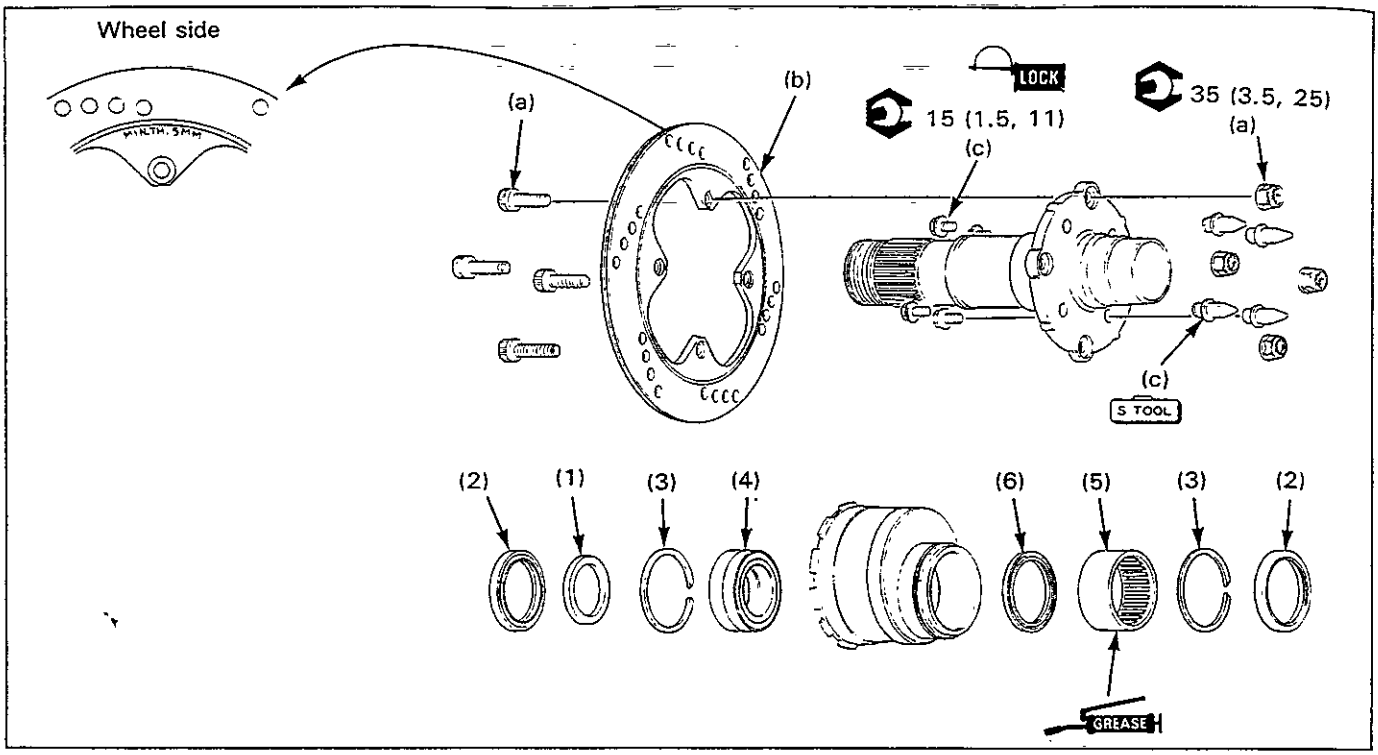

NOTE

- Replace the axle bearings as a set.

Requisite Service

- Bearing holder removal/installation (page 13-4)

	Procedure	Q'ty	Remarks
	Bearing Holder Disassembly Order		Assembly is in the reverse order of disassembly.
(1)	Collar	1	
(2)	Outer dust seal	2	
(3)	Bearing set ring	2	
(4)	Left bearing (6908LU)	1	
(5)	Right needle bearing	1	Replacement (page 13-7)
(6)	Inner dust seal	1	
	Axle Disassembly Order		Assembly is in the reverse order of disassembly.
(a)	Brake disc bolt/nut	4/4	
(b)	Brake disc	1	NOTE • At assembly, install with the "MIN. TH. 5 mm" mark facing toward the wheel.
(c)	Drive pin/pin bolt	4/4	NOTE • Carefully remove as the thread locking agent is used.

Axle Needle Bearing Replacement

Press the needle bearing out of the bearing holder.

S TOOL

Driver	**07749—0010000**
Attachment, 42 x 47 mm	**07746—0010300**
Pilot, 40 mm	**07746—0040900**

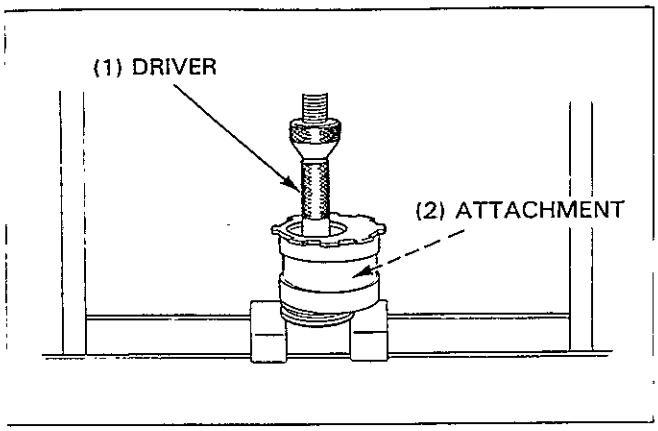

Grease the new needle bearing and press it into the bearing holder until it bottoms.

S TOOL

Driver	**07749—0010000**
Attachment, 62 x 68 mm	**07746—0010500**

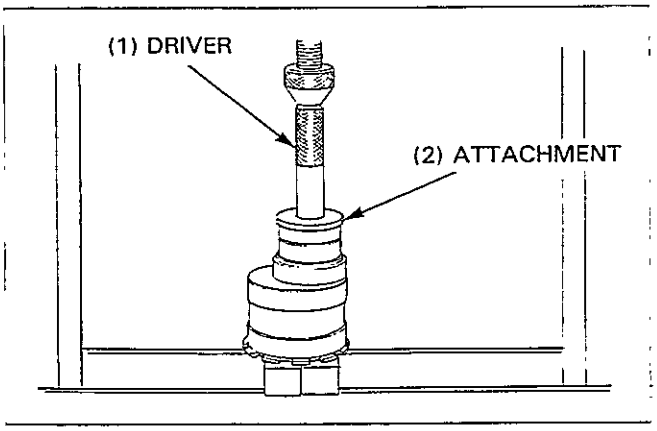

Shock Absorber, Linkage Removal/Installation

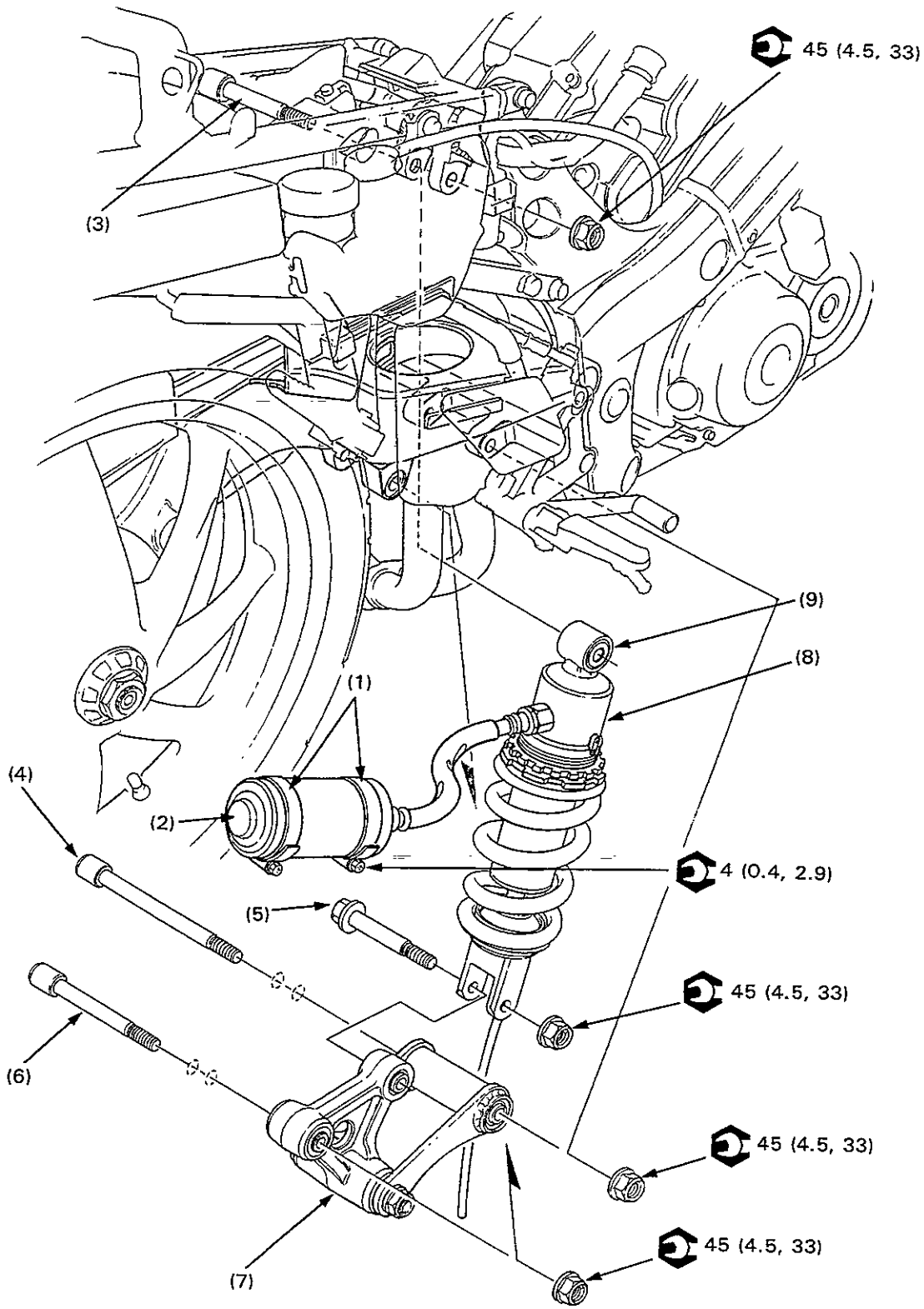

⚠ WARNING

- **Do not service the shock absorber and linkage while the exhaust sysstem is hot.**

Requisite Service

- Seat cowling removal/installation (page 2-2)

	Procedure	Q'ty	Remarks
	Removal Order		Installation is in ther reverse order of removal.
(1)	Holder band	2	Loosen the band screws.
(2)	Shock absorber reservoir	1	Remove from the bracket.
(3)	Shock absorber upper mounting bolt	1	Removal (page 13-10)
(4)	Schock link-to-frame bolt	1	
(5)	Shock absorber lower mounting bolt	1	
(6)	Shock arm-to-swingarm bolt	1	
(7)	Shock linkage assembly	1	Remove through the space between the exhaust pipes. Disassembly (page 13-14)
(8)	Shock absorber assembly	1	Disassembly (page 13-12)
(9)	Upper mounting collar	1	

Rear Suspension Bolt Removal

Raise the rear wheel off the ground and support the motorcycle securely.
Remove the seat cowling.
Remove the shock link-to frame bolt.

NOTE

- Loosen the nut first then remove the bolt for easy removal.

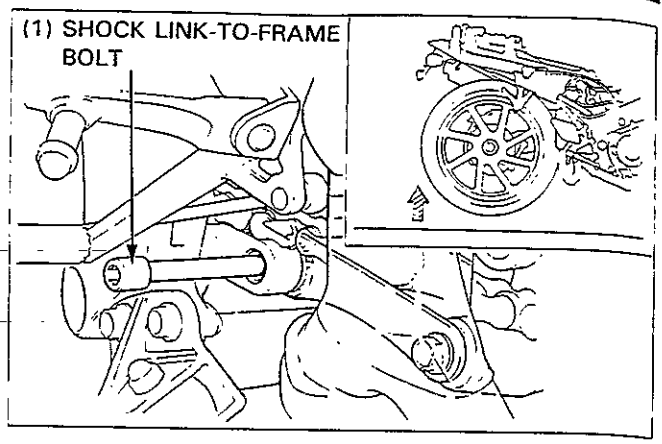

Remove the shock absorber upper mounting bolt while supporting the rear wheel by hand.

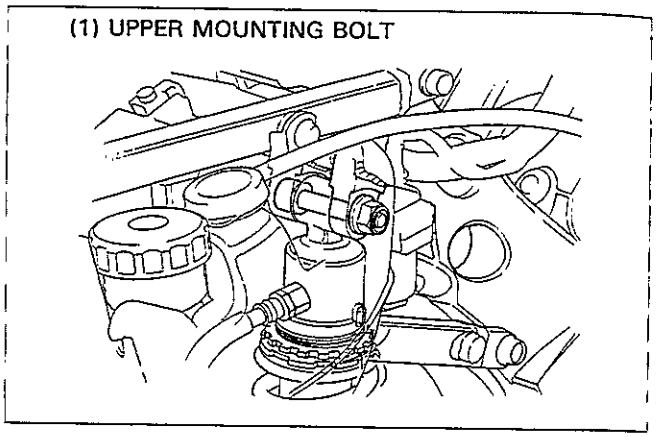

Loosen the shock absorber lower mounting nut.
Raise the wheel further by hand and remove the shock absorber lower mounting bolt.

NOTE

- Be careful not to damage the exhaust pipe while servicing.

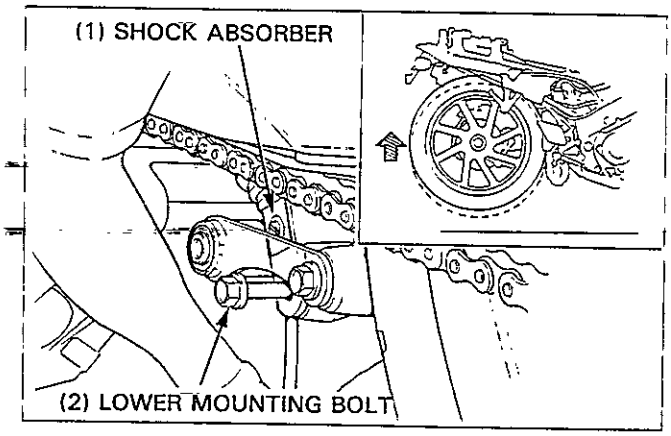

Remove the screw and the lower portion of the drive chain slider from the swingarm.
Remove the shock arm-to-swingarm bolt.

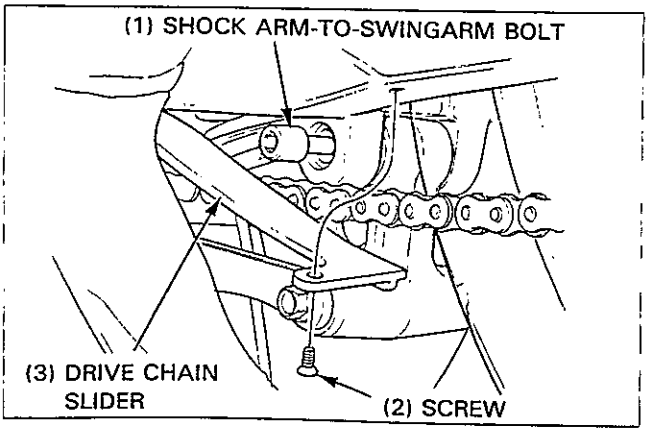

Rear Suspension Bolt Installation

Install the shock absorber with the drain tube forward and temporarily install the upper mounting bolt.

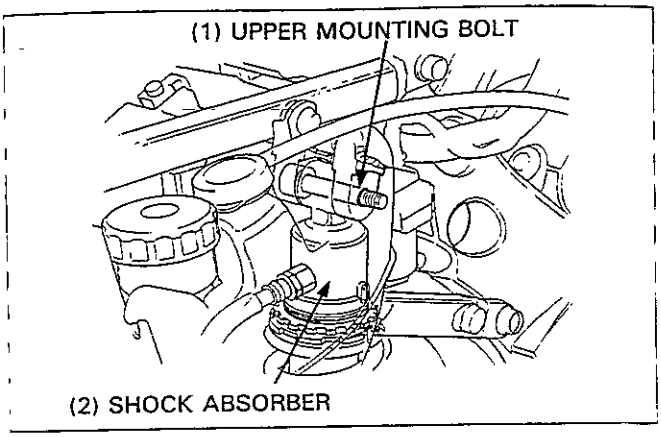

Install the shock linkage assembly, and install and tighten the chock arm-to-swingarm bolt.

Torque: 45 N·m (4.5 kg-m, 33 ft-lb)

Install the drive chain slider and screw.

Torque: 4 N·m (0.4 kg-m, 2.9 ft-lb)

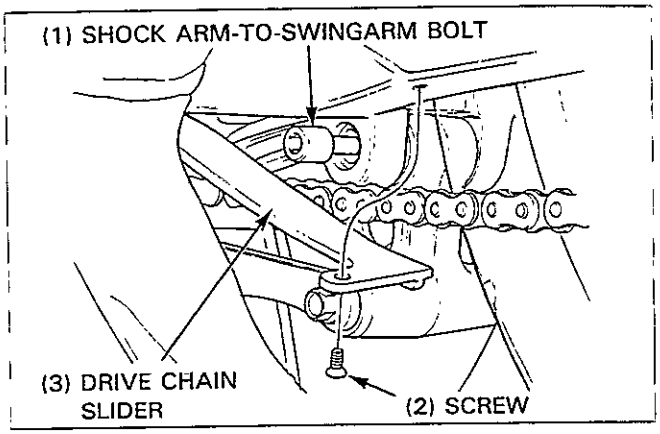

While holding the shock absorber, remove the upper mounting bolt.
Raise the rear wheel and install the shock absorber lower mounting bolt.

Torque: 45 N·m (4.5 kg-m, 33 ft-lb)

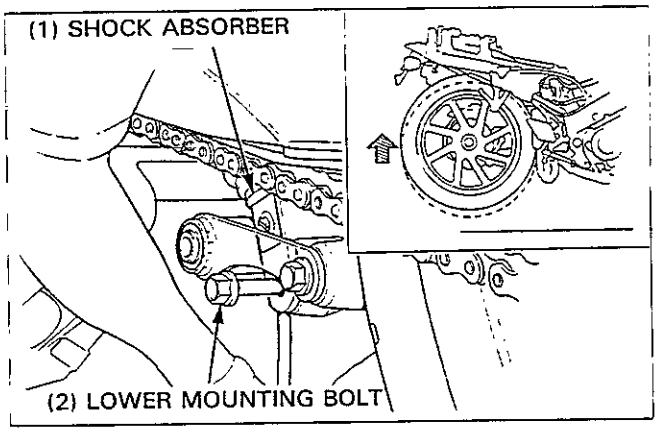

Install the shock link-to-fram bolt.

Torque: 45 N·m (4.5 kg-m, 33 ft-lb)

While supporting the rear wheel, install the shock absorber upper mounting bolt and tighten it.

Torque: 45 N·m (4.5 kg-m, 33 ft-lb)

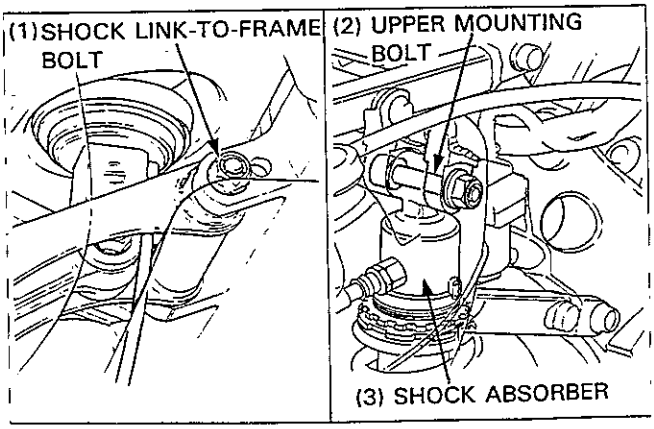

Shock Absorber Disassembly/Assembly

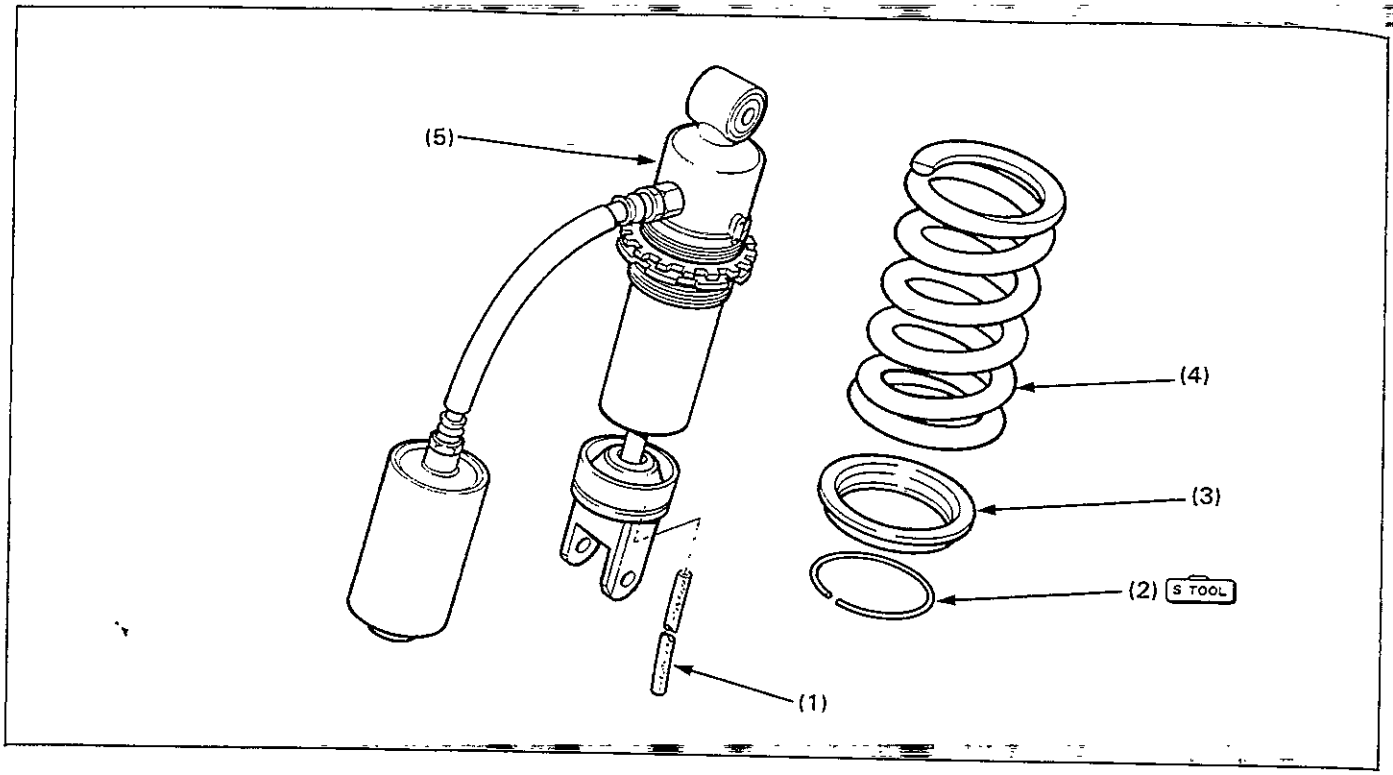

⚠ WARNING

- **The shock absorber contains nitrogen under high pressure. Do not allow fire or heat near the shock absorber.**
- **Before disposal of the shock absorber, release the nitrogen (Step: section 19 of the Common Service Manual; Drilling point: page 1-11).**

NOTE

- Loosen the spring pre-load adjuster lock nut and adjuster nut fully for easy disassembly. When the adjuster nut is loosened, adjust the spring installed length and tighten the lock nut.

Requisite Service

- Shock absorber, linkage removal/installation (13-8)

	Procedure	Q'ty	Remarks
	Disassembly Order		Assembly is in the reverse order of disassembly.
(1)	Drain tube	1	
(2)	Stopper ring	1	Removal/installation (page 13-13)
(3)	Lower spring seat	1	
(4)	Spring	1	
(5)	Damper unit	1	

Stopper Ring Removal/Installation

Install the shock absorber compressor and attachment on the shock absorber as shown.

(S TOOL)

Shock absorber compressor	07GME—0010000
Attachment	07959—MB10000

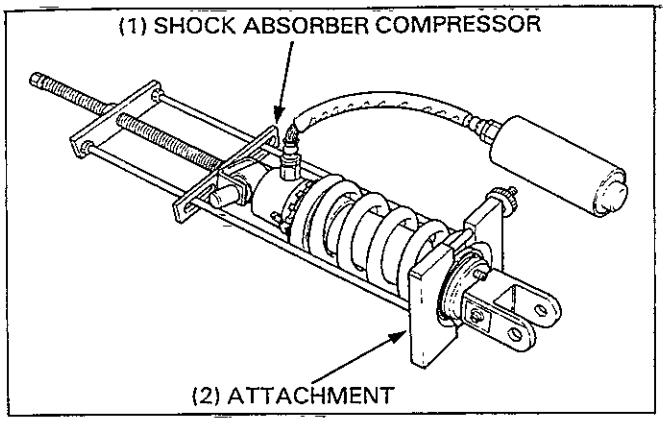

Turn the compressor handle and slowly compress the spring until the stopper ring can be removed.

Remove the stopper ring.

Install the stopper ring in the reverse order of removal.

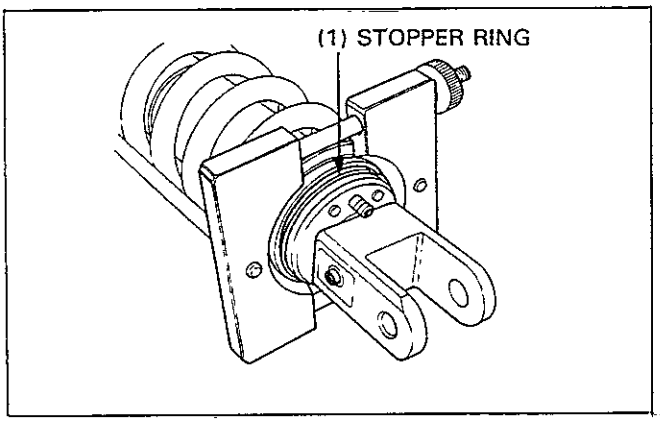

Shock Absorber Disposal Procedure

Center punch the center of the pressure tank cap to mark the drilling point.
Wrap the pressure tank inside a plastic bag.
Support the pressure tank in a vise as shown.

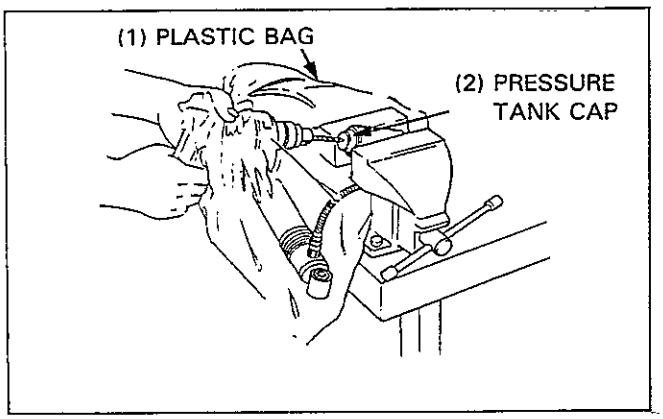

Through the open end of the bag, insert a drill motor with a sharp 2—3 mm (5/64—1/8 in) drill bit.

⚠ WARNING

- **Do not use a dull drill bit which could cause a build-up of excessive heat and pressure inside the damper, leading to explosion and severe personal injury.**
- **The shock absorber contains nitrogen gas and oil under high pressure. Do not drill the damper case pressure tank body, or you may drill into the oil chamber; oil escaping under high pressure may cause serious personal injury.**
- **Always wear eye protection to avoid getting metal shavings in your eyes when the gas pressure is released. The plastic bag is only intended to shield you from the escaping gas.**

Hold the bag around the drill motor and briefly run the drill motor inside the bag; this will inflate the bag with air from the motor and help keep the bag from getting caught in the bit when you start.

Remove the joint hose from the damper.

Shock Linkage Disassembly/Assembly

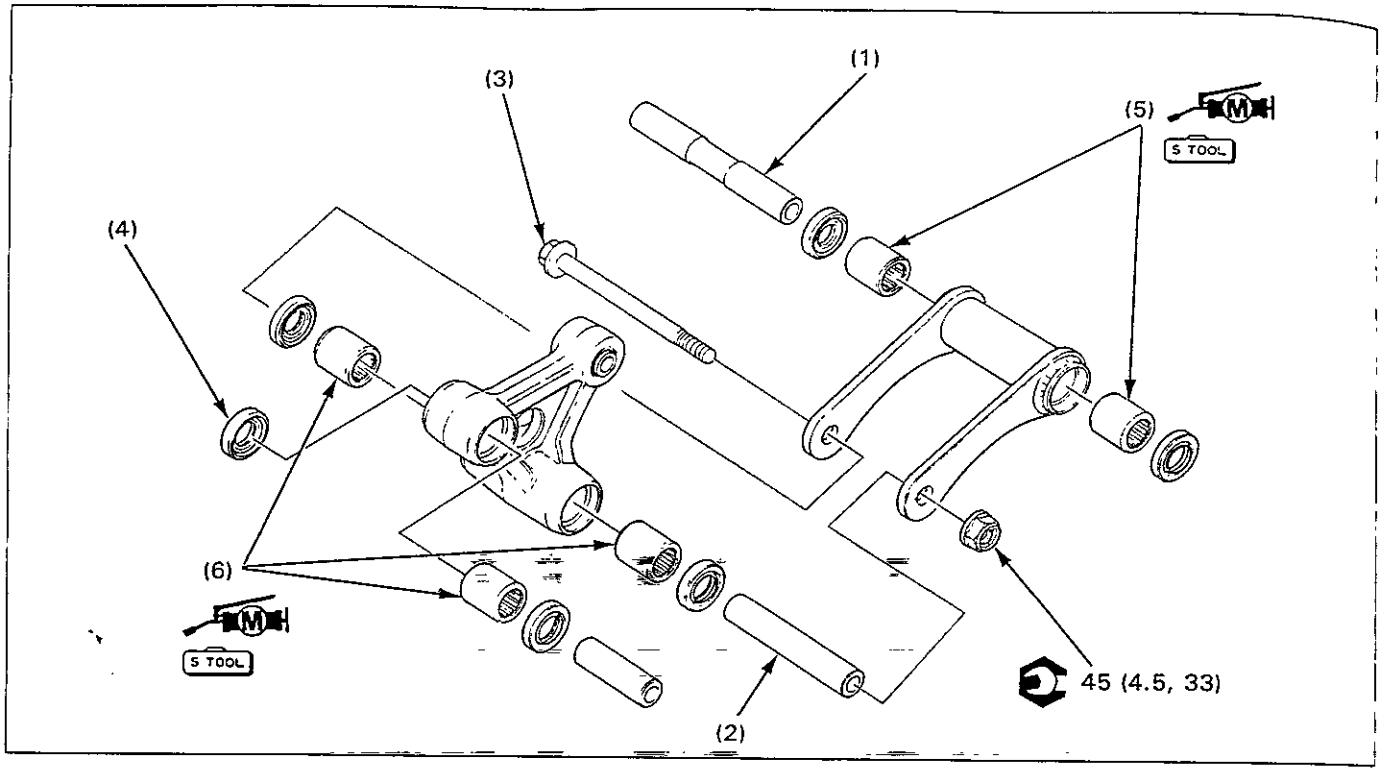

Requisite Service

- Shock absorber, linkage removal/installation (13-8)

	Procedure	Q'ty	Remarks
	Disassembly Order		Assembly is in the reverse order of disassembly.
(1)	Shock link collar	1	
(2)	Shock arm collar	1	
(3)	Shock arm-to-shock link bolt	1	NOTE • At assembly, note the installation direction of the shock arm, shock link and bolt.
(4)	Dust seal	6	
(5)	Shock link needle bearing	2	
(6)	Shock arm needle bearing	3	

Shock Linkage Bearing Replacement

Removal

Press the needle bearings out of the shock arm.

S TOOL

Pin driver assembly **07GMD—KT80100**

NOTE

- Do not remove the shock absorber lower mount bushing.

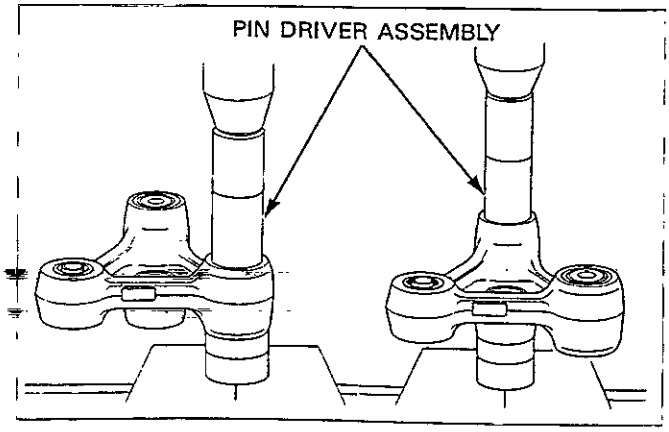

Remove the needle bearings from the shock link with the following tools.

TOOL	
Bearing remove	07936—3710300
Remover handle	07936—3710100
Sliding weight	07741—0010201

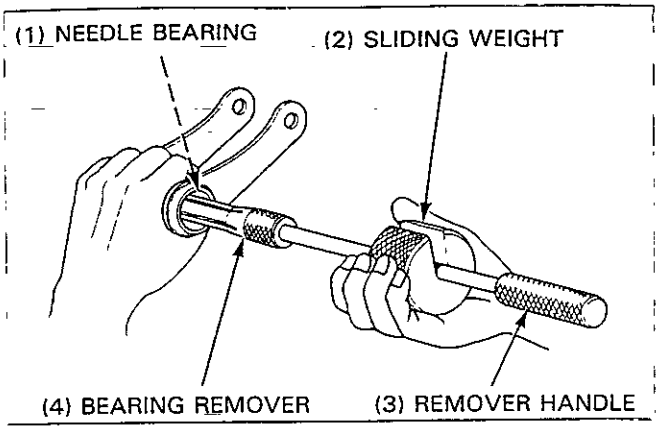

Installation

Apply molybdenum disulfide grease to a new needle bearing and press the bearing into the shock link until it bottoms.

TOOL	
Driver	07749—0010000
Attachment, 24 x 26 mm	07746—0010700
Pilot, 17 mm	07746—0040400

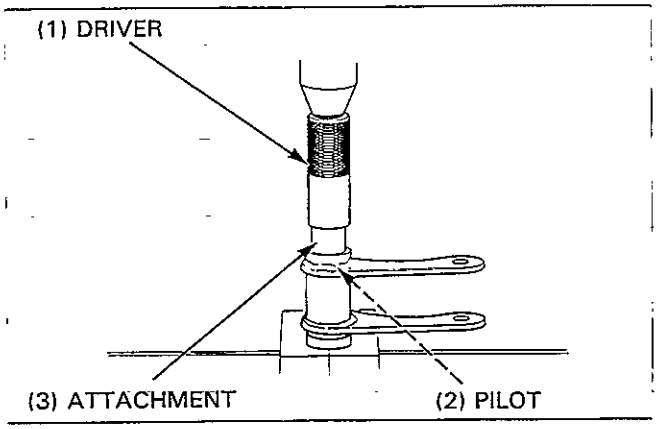

Shock link pivot:

Apply molybdenum disulfide grease to a new needle bearing and press the bearing into the shock arm until the attachment bottoms.

TOOL	
Driver	07749—0010000
Attachment, 24 x 26 mm	07746—0010700
Pilot, 17 mm	07746—0040400

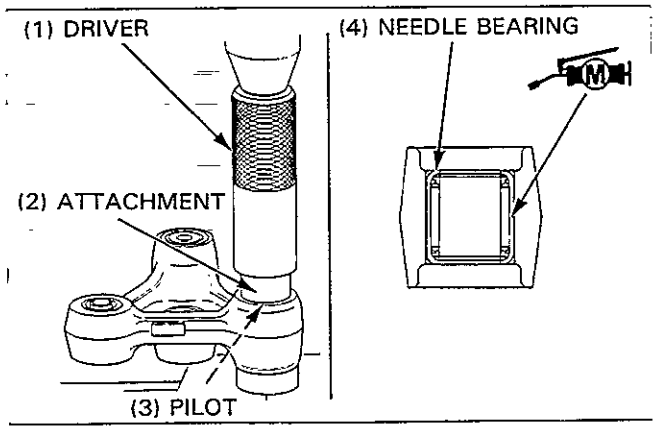

Swingarm pivot:

Apply molybdenum disulfide grease to a new needle bearing and press the bearing into the shock arm until the attachment bottoms.

TOOL	
Driver	07749—0010000
Attachment, 24 x 26 mm	07746—0010700
Pilot, 17 mm	07746—0040400

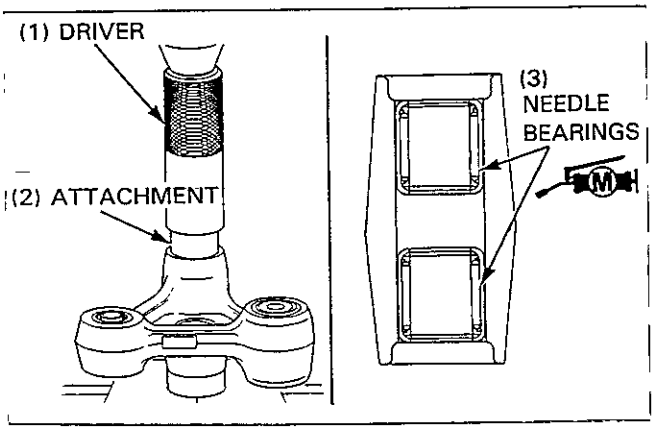

Swingarm Removal/Installation

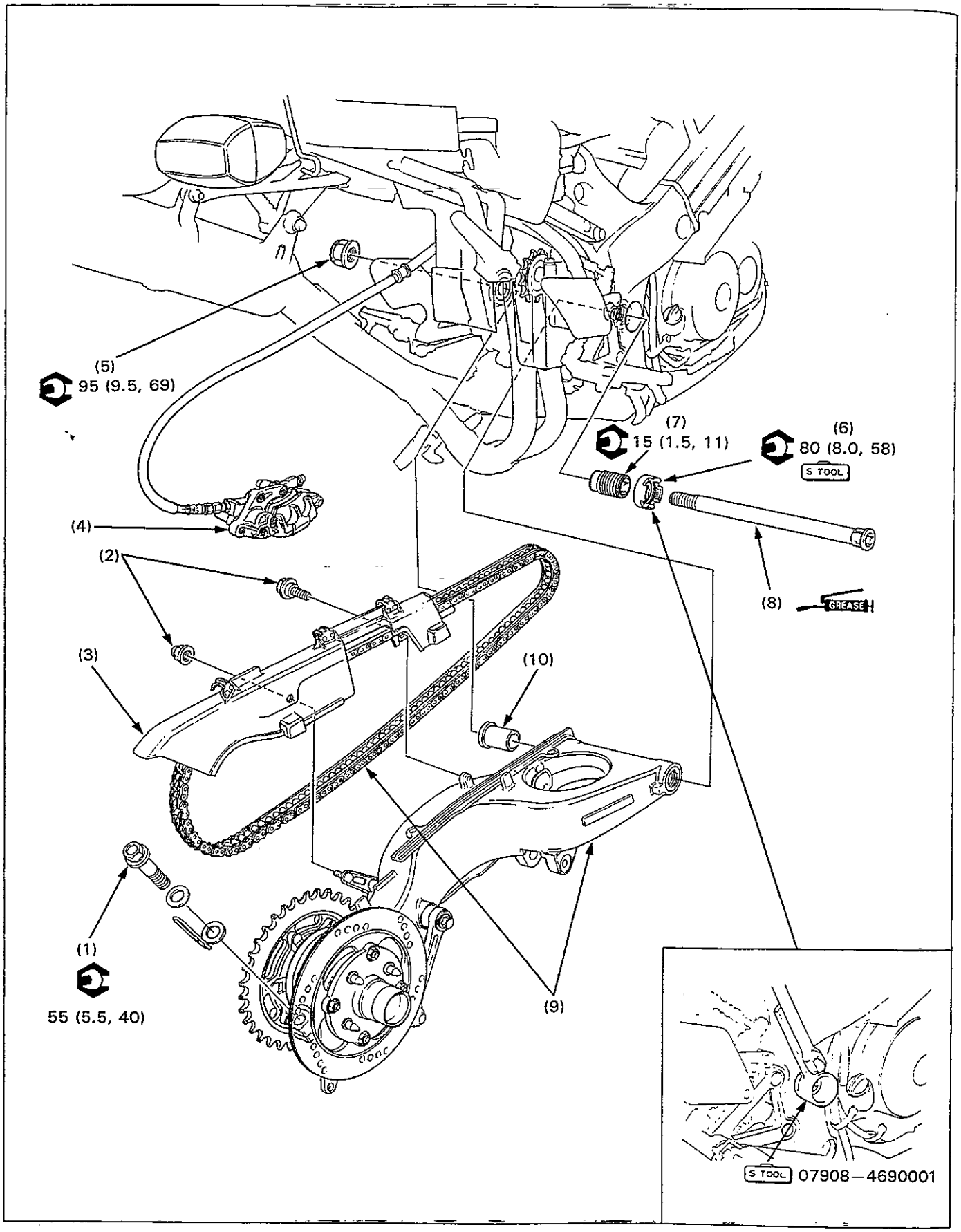

CAUTION

- **Support the removed caliper with a piece of wire so that it does not hang from the brake hose. Do not twist the brake hose.**

NOTE

- Do not depress the pedal when the caliper is removed, or it will be difficult to refit the disc between the brake pads.

Requisite Service

- Rear whee, driven sprocket removal/installation (page 13-2)
- Shock absorber, linkage removal/installation (page 13-8)

	Procedure	Q'ty	Remarks
	Removal Order		
(1)	Bearing holder pinch bolt/hose clamp	1/1	
(2)	Drive chain cover bolt/nut	1/1	
(3)	Drive chain cover	1	Remove the brake hose from the clamps.
(4)	Rear brake caliper	1	
(5)	Pivot nut	1	
(6)	Adjust bolt lock nut	1	
(7)	Adjust bolt	1	Loosen by turning the pivot bolt counterclockwise with the hex. wrench.
(8)	Pivot bolt	1	
(9)	Swingarm/drive chain	1/1	Disassembly/assembly (page 13-19)
(10)	Left pivot collar	1	
	Installation Order		
(10)	Left pivot collar	1	Install into the swingarm.
(9)	Swingarm/drive chain	1/1	
(7)	Adjust bolt	1	Installation (page 13-18)
(8)	Pivot bolt	1	
(5)	Pivot nut	1	
(6)	Adjust bolt lock nut	1	
(4)	Rear brake caliper	1	
(3)	Drive chain cover	1	Clamp the brake hose.
(2)	Drive chain cover bolt/nut	1/1	
(1)	Bearing holder pinch bolt/hose clamp	1/1	NOTE • After installing, adjust the drive chain slack (page 3-11).

Pivot Bolt Installation

Screw the adjust bolt in the left pivot by hand.
Apply thin coat of grease to the pivot bolt and insert the bolt in the pivot.
Align the hex. head of the pivot bolt with the hex hole in the adjust bolt and push the pivot bolt in fully.

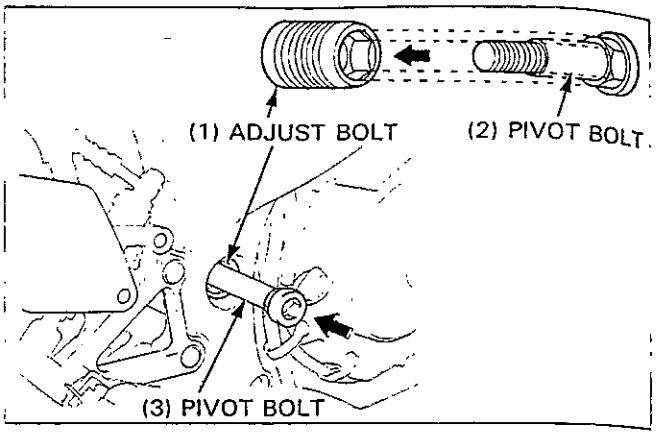

Tighten the adjust bolt by turning the pivot bolt with the hex. wrench.

Torque: 15 N·m (1.5 kg-m, 11 ft-lb)

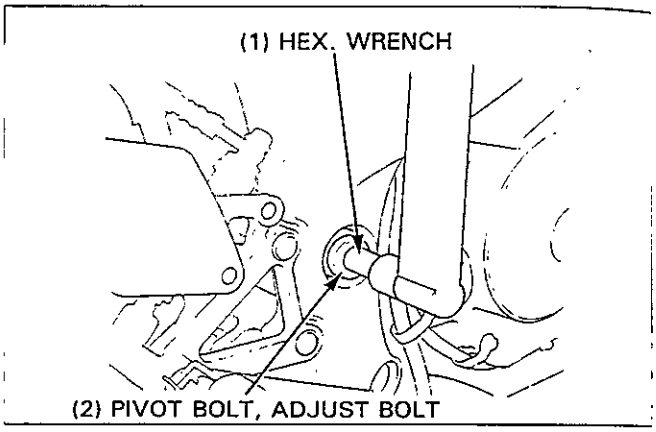

Loosely install the pivot nut.

Install the adjust bolt lock nut and tighten it while holding the pivot bolt to prevent the adjust bolt from turning.

Torque: 80 N·m (8.0 kg-m, 58 ft-lb)

S TOOL

Pivot adjust wrench **07908—4690001**

Tighten the pivot nut.

Torque: 95 N·m (9.5 kg-m, 69 ft-lb)

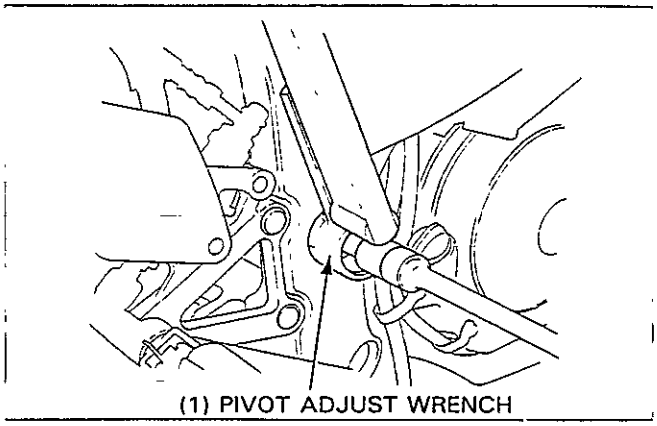

Swingarm Disassembly/Assembly

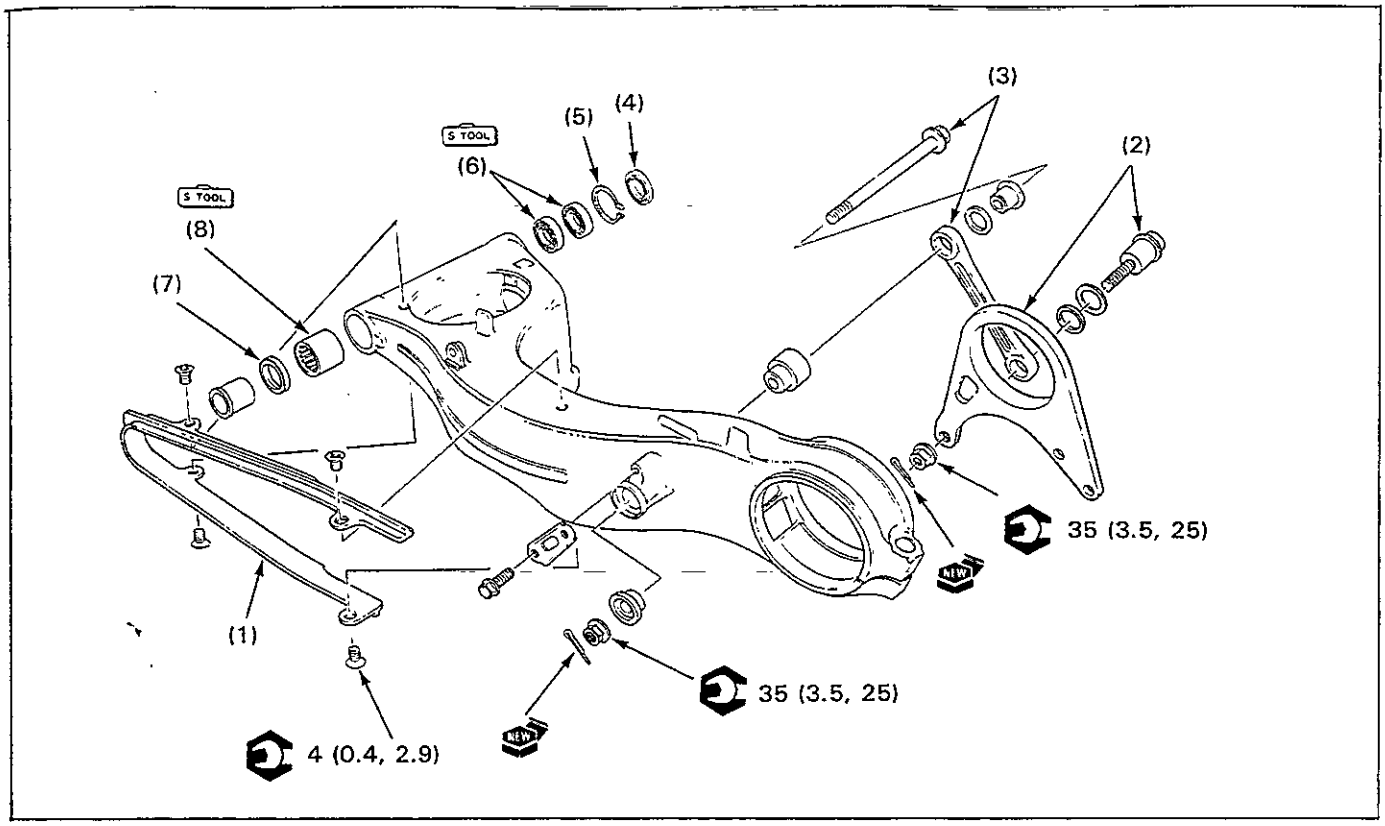

Requisite Service

- Swingarm Removal/Installation (page 13-16)

	Procedure	Q'ty	Remarks
	Disassembly Order		Assembly is in the reverse order of disassembly.
(1)	Drive chain slider	1	
(2)	Caliper bracket/bolt	1/1	
(3)	Torque link/bolt	1/1	
(4)	Right dust seal	1	
(5)	Snap ring	1	
(6)	Right pivot ball bearing	2	Replacement (page 13-20)
(7)	Left dust seal	1	
(8)	Left pivot needle bearing	1	Replacement (page 13-20)

Pivot Bearing Replacement

Removal

Remove the snap ring.

Remove the ball bearing from the right swingarm pivot.

S TOOL

Bearing remover set	**07936—3710001**

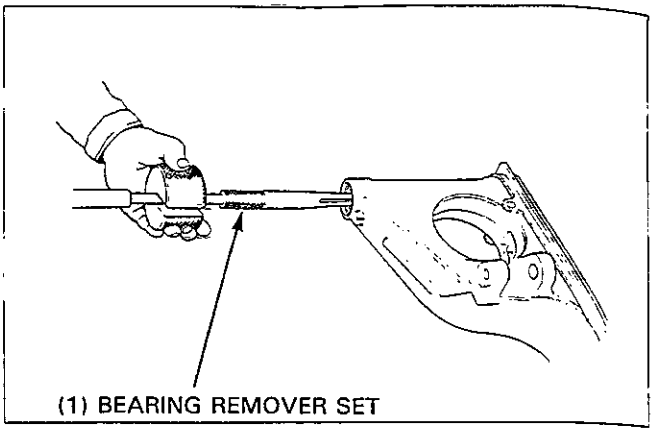

Drive the needle bearing out of the left swingarm pivot.

S TOOL

Needle bearing remover	**07HMC—MR70100**
Driver shaft	**07946—MJ00100**

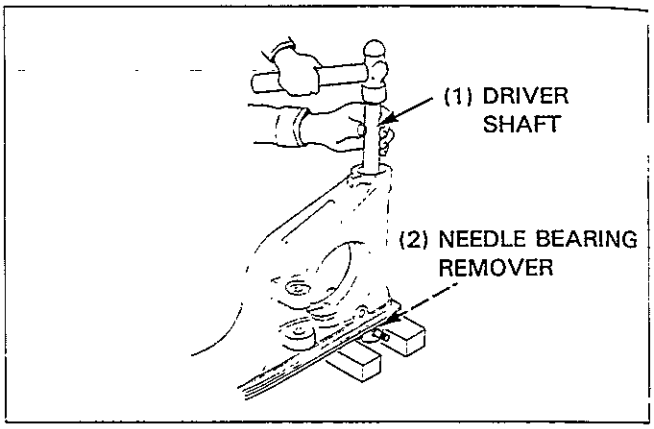

Installation

Apply molybdenum disulfide grease to a new needle bearing.

Carefully press the needle bearing into the left swingarm pivot 4 mm (0.16 in) from the edge of the swingarm, measuring with the vernier caliper.

S TOOL

Driver	**07749—0010000**
Attachment, 37 x 40 mm	**07746—0010200**
Pilot, 28 mm	**07746—0041100**

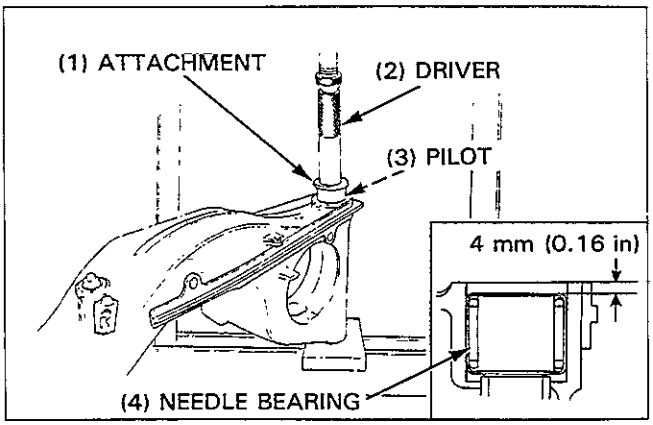

Drive ball bearings into the right swingarm pivot one by one with the marked side facing out until they bottom.

S TOOL

Driver	**07749—0010000**
Attachment, 37 x 40 mm	**07746—0010200**
Pilot, 20 mm	**07746—0040500**

Install the snap ring

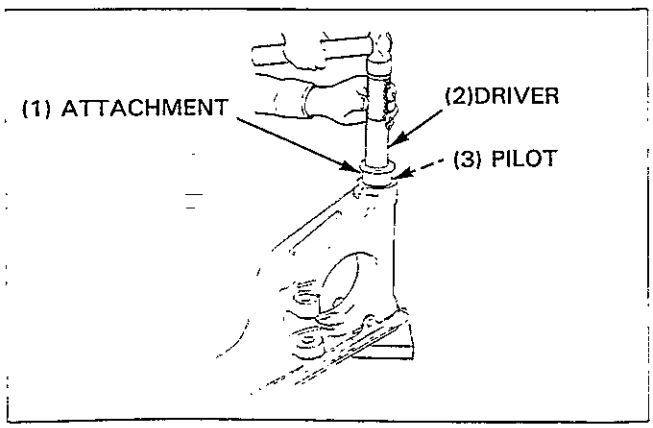

14. Brake System

Service Information	14-1	Front Brake Caliper Disassembly/ Assembly	14-6
Troubleshooting	14-1	Rear Master Cylinder Disassembly/ Assembly	14-8
Front Brake Pad Replacement	14-2	Rear Brake Caliper Disassembly/ Assembly	14-10
Rear Brake Pad Replacement	14-3	Rear Brake Pedal Removal/Installation	14-12
Front Master Cylinder Disassembly/ Assembly	14-4		

Service Information

⚠ WARNING

- **A contaminated brake disc or pad reduces stopping power. Discard contaminated pads and clean a contaminated disc with a high quality brake degreasing agent.**
- **Inhaled asbestos fibers have been found to cause respiratory disease and cancer. Never use an air hose or dry brush to clean brake assemblies.**

- Spilled brake fluid will severely damage instrument lenses and painted surfaces. It is also harmful to some rubber parts. Be very careful whenever you remove the reservoir cap: make sure the front reservoir is horizontal first.
- Never allow contaminants (dirt, water, etc.) to get into an open reservoir.
- Once the hydraulic system has been opened, or if the brakes feel spongy, the system must be bled.
- Always use fresh DOT 4 brake fluid from a sealed container when servicing the system. Do not mix different types of fluid as they may not be compatible.
- Always check brake operation before riding the motorcycle.

Troubleshooting

Brake Lever/Pedal Soft or Spongy
- Air bubbles in the hydraulic system
- Leaking hydraulic system
- Contaminated brake pad/disc
- Worn caliper piston seal
- Worn master sylinder piston cups
- Worn brake pad/disc
- Contaminated caliper
- Caliper not sliding properly
- Low brake fluid level
- Clogged fluid passage
- Warped/deformed brake disc
- Sticking/worn caliper piston
- Sticking/worn master cylinder piston
- Contaminated master cylinder
- Bent brake lever/pedal

Brake Lever/Pedal Hard
- Clogged/restricted brake system
- Sticking/worn caliper piston
- Caliper not sliding properly
- Clogged/restricted fluid passage
- Worn caliper piston seal
- Sticking/worn master cylinder piston
- Bent brake lever/pedal

Brake Drag
- Contaminated brake pad/dics
- Misaligned wheel
- Badly worn brake pad/disc
- Warped/deformed brake disc
- Caliper not sliding properly
- Clogged/restricted fluid passage
- Sticking/worn caliper piston

Front Brake Pad Replacement

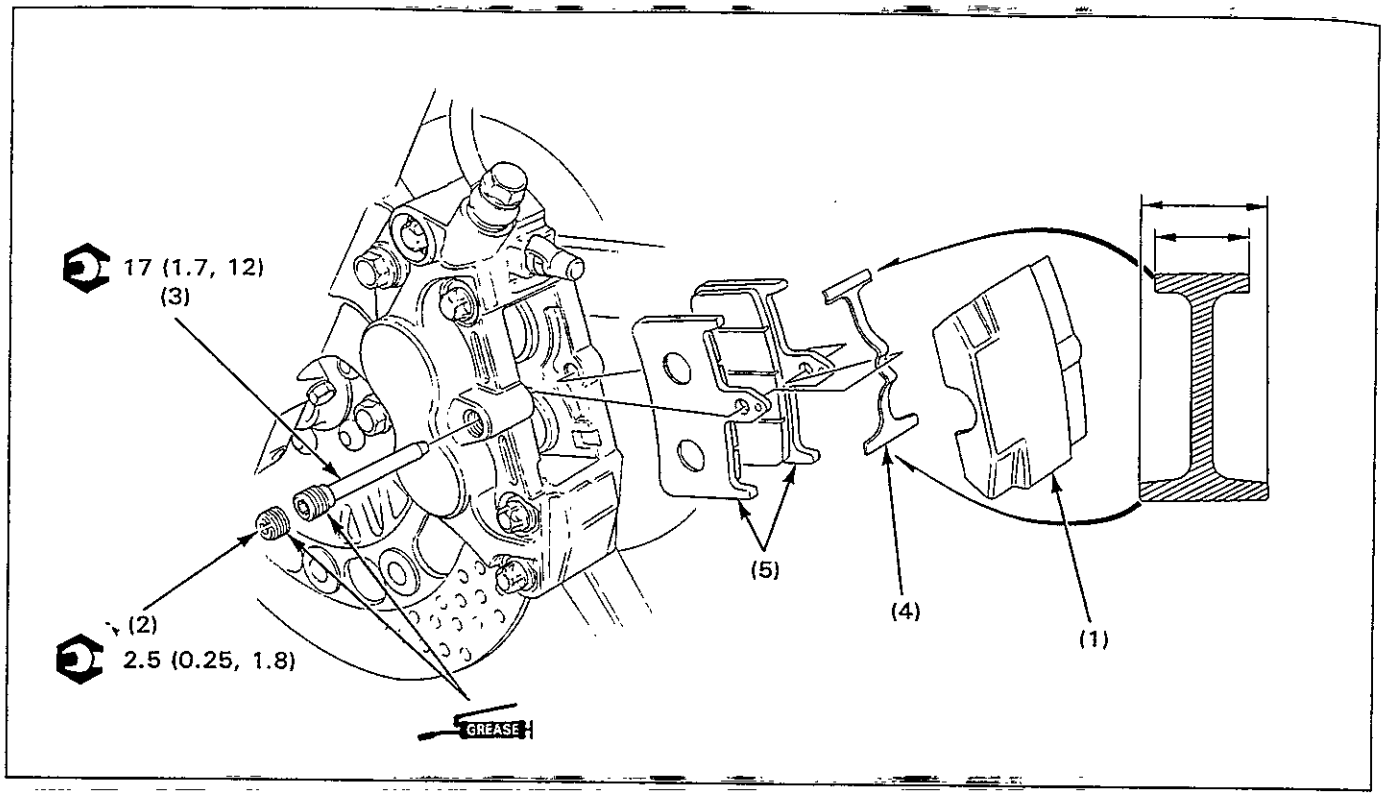

⚠ WARNING

- **A contaminated brake disc or pad reduces stopping power. Discard contaminated pads and clean a contamicated disc with a high quality brake degreasing agent.**
- **Inhaled asbestos fibers have been found to cause respiratory disease and cancer. Never use an air hose or dry brush to clean brake assemblies.**
- **After replacement, operate the brake lever to seat the caliper pistons against the pads.**

NOTE

- The brake pads can be replaced without disconnecting the hydraulic system.
- Replace the brake peds as a set.
- Apply a thin coat of grease onto the pad pin and pad plug threads so as not to rust it.

	Procedure	Q'ty	Remarks
	Removal Order		Installation is in the reverse order of removal.
(1)	Dust cover	1	
(2)	Pad pin plug	1	
(3)	Pad pin	1	
(4)	Pad spring	1	NOTE • At installation, align the tabs with the caliper grooves as shown.
(5)	Pad	2	NOTE • Push the piston all the way into provide clearance for new pads.

Rear Brake Pad Replacement

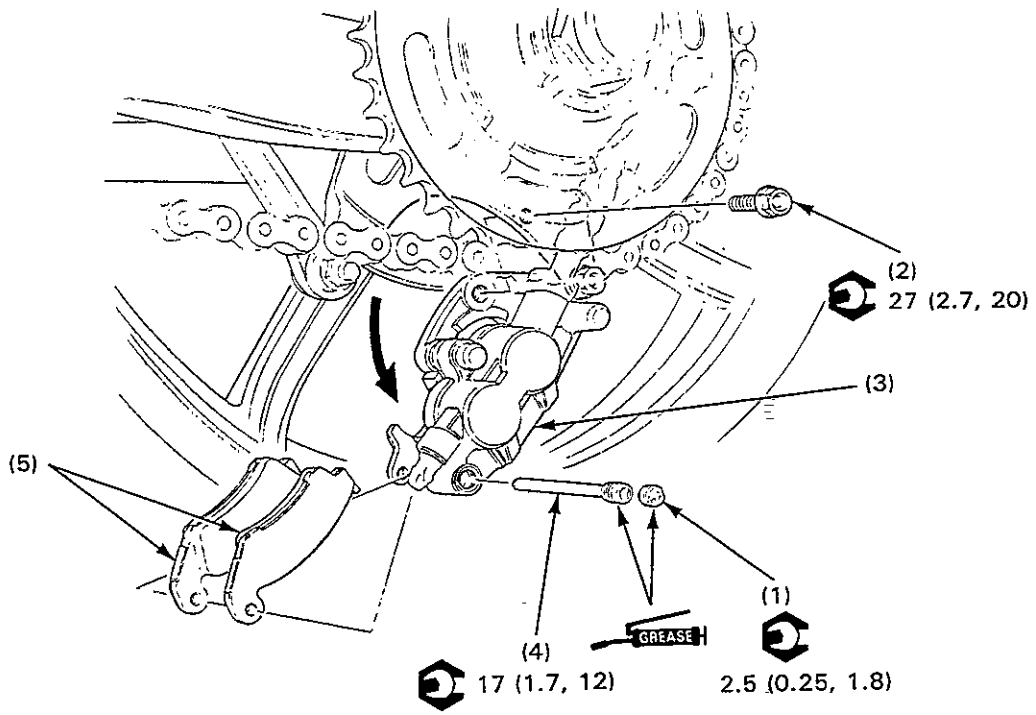

⚠ WARNING

- **A contaminated brake disc or pad reduces stopping power. Discard contaminated pads and clean a contamicated disc with a high quality brake degreasing agent.**
- **Inhaled asbestos fibers have been found to cause respiratory disease and cancer. Never use an air hose or dry brush to clean brake assemblies.**
- **After replacement, operate the brake lever to seat the caliper pistons against the pads.**

NOTE

- The brake pads can be replaced without disconnecting the hydraulic system.
- Replace the brake peds as a set.
- Apply a thin coat of grease onto the pad pin and pad plug threads so as not to rust it.

	Procedure	Q'ty	Remarks
	Removal Order		
(1)	Pad pin plug	1	Loosen the pad pin after removing the plug.
(2)	Caiper mounting bolt	1	Remove the front bolt.
(3)	Caliper assembly	1	Pivot downward out of the disc.
(4)	Pad pin	1	Pull out while pushing the pads in slightly.
(5)	Pad/shim	2	NOTE • Push the pistons all the way in to provide clearance for new pads.
	Removal Order		
(5)	Pad/shim	2	Do not forget to install the shim.
(4)	Pad pin	1	Loosely install while pushing the pads in slightly.
(3)	Caliper accembly	1	**CAUTION** • **Be careful not to damage the pads.**
(2)	Cariper mounting bolt	1	
(1)	Pad pin plug	1	Tighten the pad pin before installing the plug.

Front Master Cylinder Disassembly/Assembly

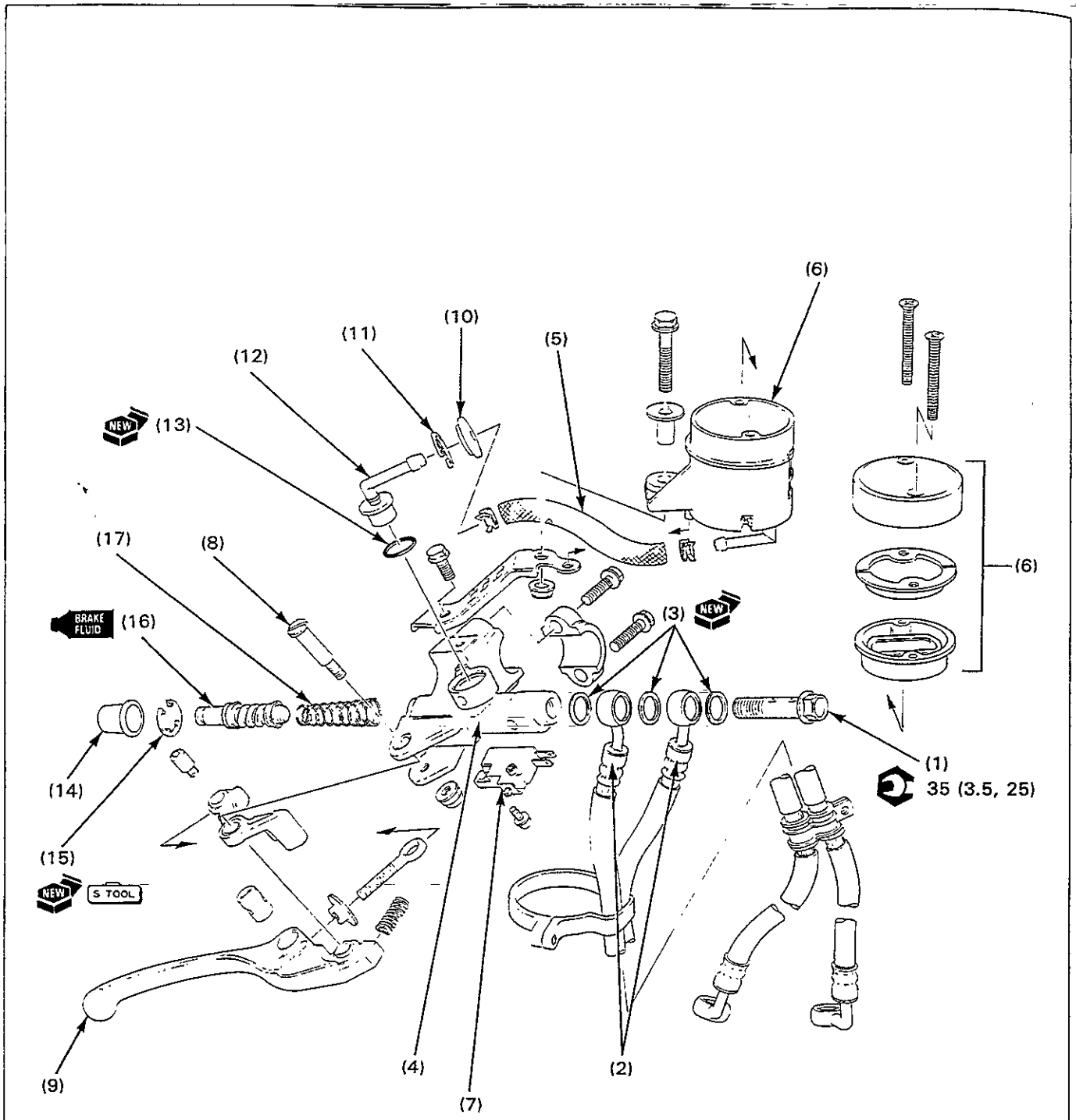

⚠ WARNING

- **Check the brake system by applying the brake after the air bleeding.**

CAUTION

- **Avoid apilling fluid on painted, plastic, or rubber parts. Place a rag over these parts whenever the system is serviced.**
- **When remoing the oil bolt, cover the end of the brake hose to prevent contamination. Do not allow the foreign material to enter the system.**
- **Do not allow the lips of the cups to turn insie and be certain the snap ring is firmly seated in the groove.**

NOTE

- Use only DOT 4 brake fluid from a sealed container.

Requisite Service

- Front brake fluid draining/air bleeding

	Procedure	Q'ty	Remarks
	Disassembly Order		Assembly is in the reverse order of disassembly.
(1)	Brake oil bolt	1	
(2)	Brake hose	2	NOTE • Do not twist the hoses.
(3)	Sealing washer	3	
(4)	Master cylinder assembly	1	Disconnect the brake switch wires and remove the holder.
(5)	Reservoir hose	1	
(6)	Reservoir assembly	1	
(7)	Brake switch	1	
(8)	Brake lever pivot bolt	1	
(9)	Brake lever assembly	1	
(10)	Rubber cap	1	
(11)	Snap ring	1	
(12)	Reservoir hose joint	1	
(13)	O-ring	1	
(14)	Piston boot	1	
(15)	Snap ring	1	Use the snap ring pliers (07914—3230001). **CAUTION** • **At installation, be certain the snap ring is firmly seated in the groove in the master cylinder body.**
(16)	Master piston assembly	1	NOTE • Do not remove the piston cups from the piston.
(17)	Spring	1	NOTE • At installation, install with the small coil end facing toward the primary cup.

Front Brake Caliper Disassembly/Assembly

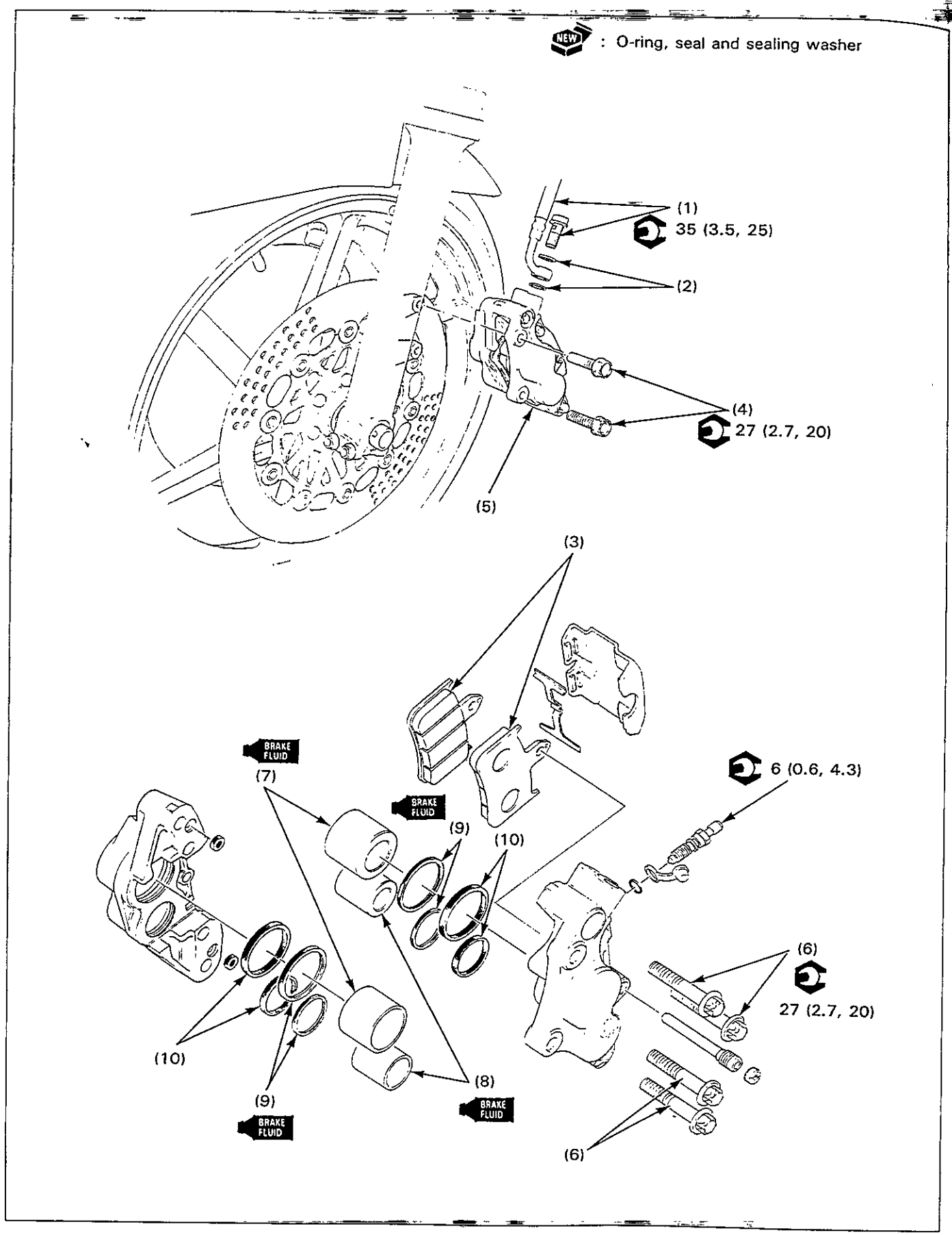

⚠ WARNING

- **Dsicard contaminated pads and clean a contamicated disc with a high quality brake degreasing agent.**
- **Check the brake system by applying the brake after the air bleeding.**

CAUTION

- **Spilled brake fluid will damage painted, plastic, or rubber parts.**

NOTE

- Do not remove the bleed valve unless it is replaced.

Requisite Service

- Front brake fluid draining/air bleeding

	Procedure	Q'ty	Remarks
	Disassembly Order		Assembly is in the reverse order of disassembly.
(1)	Brake oil bolt/hose	1/1	NOTE • Do not twist the hose. • At installation, install the hose with the joint pipe facing toward the fork.
(2)	Sealing washer	2	
(3)	Pad	2	Removal/Installation (page 14-2)
(4)	Caliper mounting bolt	2	NOTE • Loosen the torx bolts before removing the mounting bolts.
(5)	Brake caliper assembly	1	
(6)	Torx bolt	4	NOTE • At installation, tighten after installing the caliper mounting bolts.
(7)	Caliper piston (large diameter)	2	**CAUTION**
(8)	Caliper piston (small diameter)	2	• **Mark the piston to ensure that they are reinstalled in their original positions.**
(9)	Dust seal	4	**CAUTION**
(10)	Piston seal	4	• **Be careful not to damage the caliper cylinders.**

Rear Master Cylinder Disassembly/Assembly

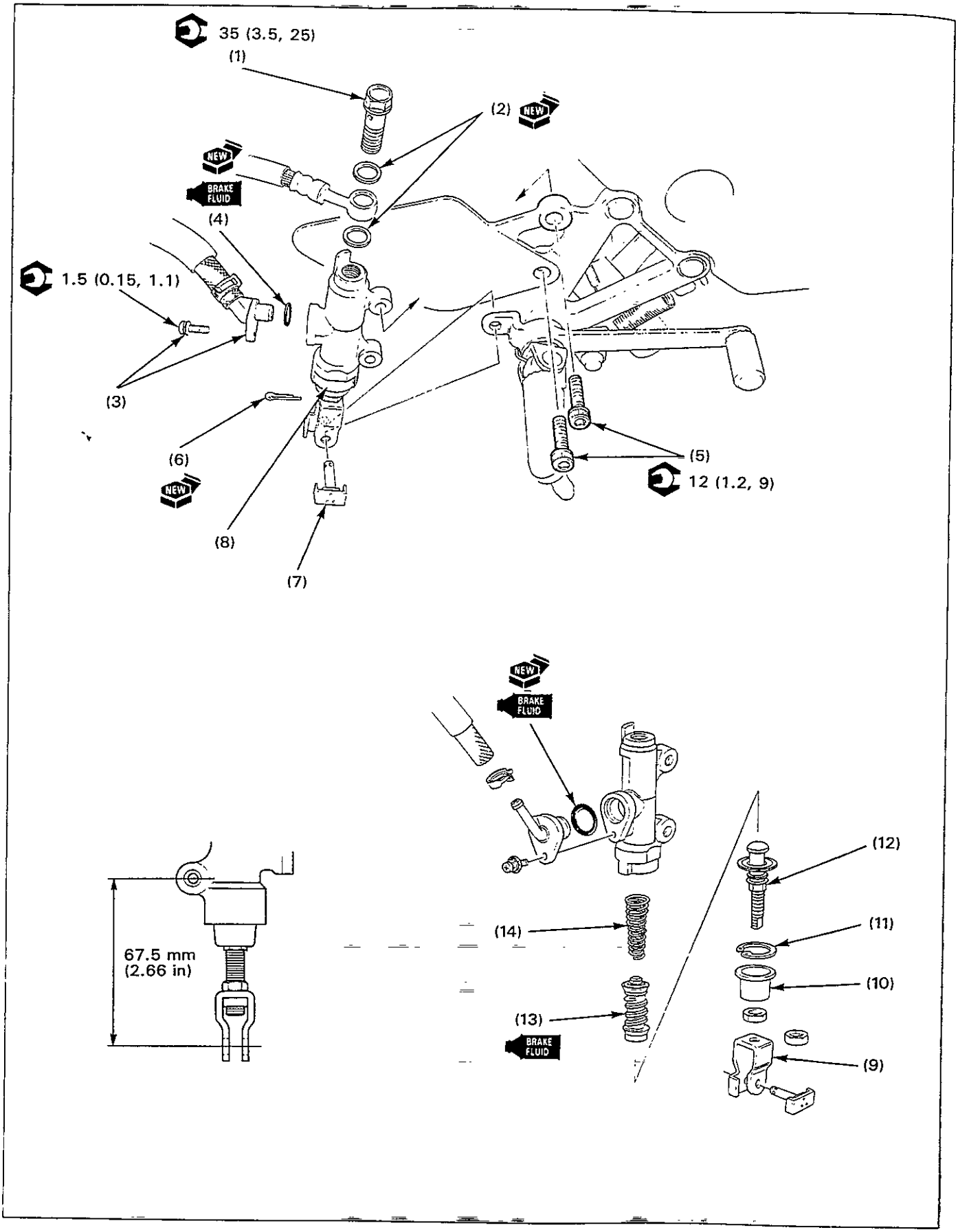

⚠ WARNING

- **Check the brake system by applying the brake after the air bleeding.**

CAUTION

- **Avoid apilling fluid on painted, plastic, or rubber parts. Place a rag over these parts whenever the system is serviced.**
- **When remoing the oil bolt, cover the end of the brake hose to prevent contamination. Do not allow the foreign material to enter the system.**
- **Do not allow the lips of the cups to turn insie and be certain the snap ring is firmly seated in the groove.**

NOTE

- Use only DOT 4 brake fluid from a sealed container.

Requisite Service

- Front brake fluid draining/air bleeding

	Procedure	Q'ty	Remarks
	Disassembly Order		
(1)	Brake oil bolt/hose	1	
(2)	Sealing washer	2	
(3)	Reservoir hose joint/screw	1/1	
(4)	O-ring	1	
(5)	Master sylincer mounting bolt	2	Loosen the bolts.
(6)	Cotter pin	1	
(7)	Joint pin	1	
(8)	Master cylinder assembly	1	Remove from the right step braket.
(9)	Pedal joint	1	Remove by loosening the lock nut.
(10)	Rubber boot	1	
(11)	Snap ring	1	Use the snap ring pliers (07914—3230001).
(12)	Push rod	1	
(13)	Master piston assembly	1	NOTE • Do not remove the piston cups from the piston.
(14)	Spring	1	
	Assembly Order		
(14)	Spring	1	NOTE • Install with the small coil end facing toward the piston.
(13)	Master piston assembly	1	
(12)	Push rod	1	
(11)	Snap ring	1	**CAUTION** • **Be certain the snap ring is firmly seated in the groove in the master cylinder body.**
(10)	Rubber boot	1	
(9)	Pedal joint	1	NOTE • Adjust joint installed length as shown.
(8)	Master cylinder assembly	1	
(5)	Master cylinder mounting bolt	2	Loosely install.
(7)	Joint pin	1	
(6)	Cotter pin	1	Tighten the master cylinder mounting bolts after installing.
(4)	O-ring	1	
(3)	Reservoir hose joint/screw	1/1	
(2)	Sealing washer	2	
(1)	Brake oil bolt/hose	1/1	Rest the joint against the master cylinder boss.

Rear Brake Caliper Disassembly/Assembly

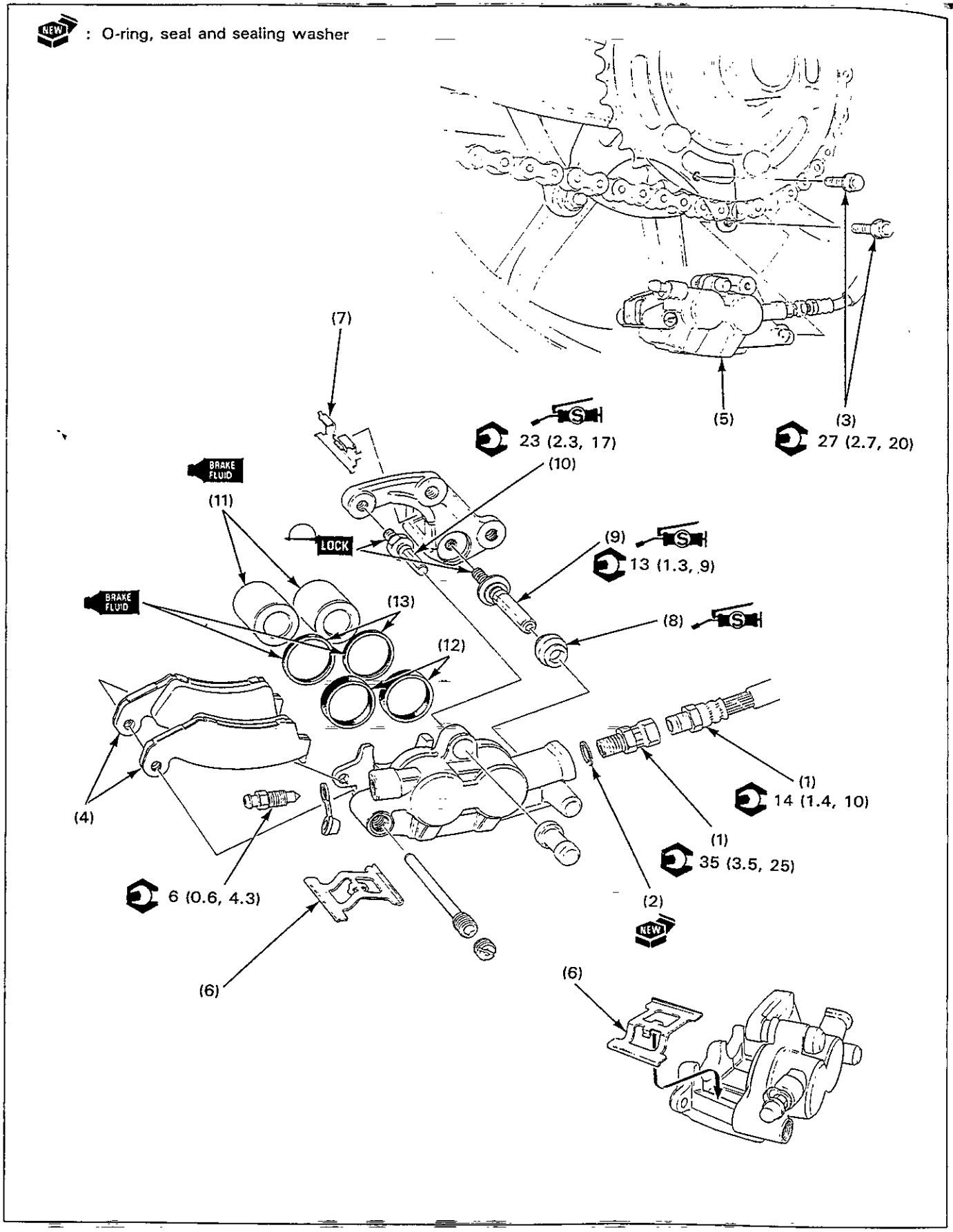

⚠ WARNING

- **Dsicard contaminated pads and clean a contamicated disc with a high quality brake degreasing agent.**
- **Check the brake system by applying the brake after the air bleeding.**

CAUTION

- **Spilled brake fluid will damage painted, plastic, or rubber parts.**

NOTE

- Do not remove the bleed valve unless it is replaced.

Requisite Service

- Rear brake fluid draining/air bleeding

	Procedure	Q'ty	Remarks
	Disassembly Order		Assembly is in the reverse order of disassembly.
(1)	Brake oil bolt/hose	1/1	**CAUTION** • **Do not twist the hose.** NOTE • Remove the hose by loosening the joint nut while holding the hose nut.
(2)	Sealing washer	1	
(3)	Caliper mounting bolt	2	NOTE • Loosen the pad pin before removing.
(4)	Pad	2	Removal/installation (page 14-3)
(5)	Caliper assembly	1	Separate the bracket from the caliper.
(6)	Pad retainer	1	NOTE • At installation, note the installation direction.
(7)	Pad retainer	1	
(8)	Pivot boot	1	
(9)	Pivot pin bolt	1	NOTE
(10)	Pivot pin bolt	1	• Do not remove the pivot pin bolt unless it is replaced.
(11)	Caliper piston	2	**CAUTION** • **Mark the piston to ensure that they are reinstalled in their original positions.**
(12)	Dust seal	2	**CAUTION**
(13)	Piston seal	2	• **Be careful not to damage the caliper cylinders.**

Rear Brake Pedal Removal/Installation

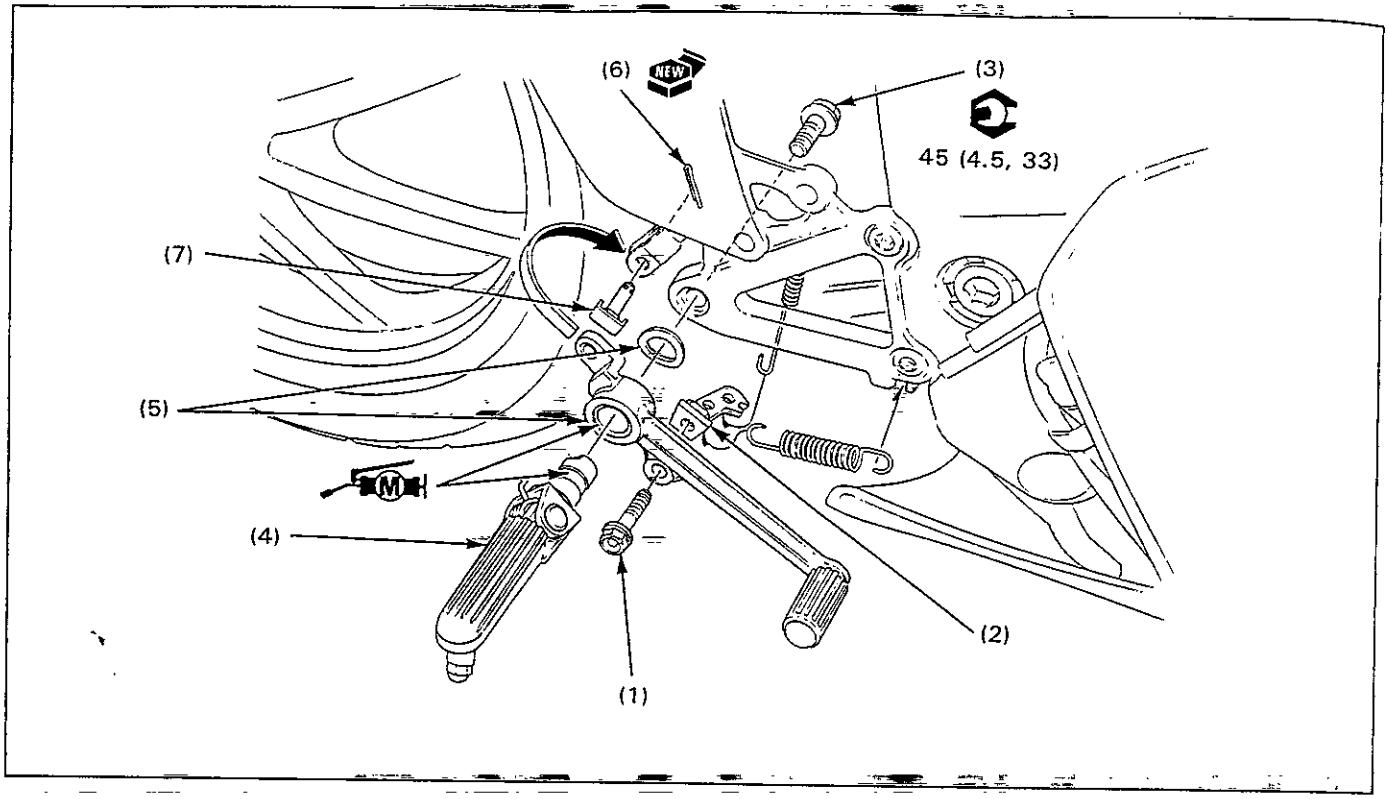

NOTE

- The pedal height can be adjusted by turning the pedal joint on the master cylinder push rod.

	Procedure	Q'ty	Remarks
	Removal Order		Installation is in the reverse order of removal.
(1)	Spring hook plate bolt	1	
(2)	Spring hook plate	1	
(3)	Step bolt	1	NOTE • At installation, align the flats of the step and step holder.
(5)	Brake pedal/thrust washer	1/1	
(6)	Cotter pin	1	
(7)	Joint pin	1	